Nanotechnology Needs Assessment

Matt DeLesDernier
Gwen Kennedy
Randy Neice

Nanotechnology Needs Assessment

What is Nanotechnology?

The term nanomaterial technically applies to materials that measure, in one or more dimensions, less than one-tenth of a micrometer. One micrometer is 1000 nanometers and nanometers are one-billionth of a meter in length. This is the nanoworld, DNA, ATP Synthase, buckminsterfullerenes, and as vast assortment of other substances are the inhabitants. Nanotechnology, then, is the design, characterization, production and application of structures, devices and systems by controlling shape and size at the nanoscale.[1]

The production of nanomaterials usually involves the manipulation of a substance at the atomic and molecular level in order to develop new materials and products. This manipulation can be chemical, mechanical, or may use organic processes to produce materials on the nanoscale. Chemical and mechanical manipulation of pre-existing materials in the production of nanomaterials is generally referred to as "top down" production while the use of organic, physical, and chemical reactivity is known as "bottom-up" production.[2]

Nanotechnology is a growing field of research and business that is in its infancy. It holds the promise of better medicinal delivery, more efficient energy use, lighter and stronger materials, and novel ways to improve the environment through mitigation and prevention techniques. It is also expected to be a $1 trillion per year business by 2015.[3]

One of the amazing discoveries in the field of nanotechnology is the realization that nanomaterials exhibit characteristics that are not present in larger versions of the same material. For instance, gold is known as a rather inert substance that has low chemical reactivity, but when gold is ground down into nanoparticles it is extremely volatile. The novel physical and chemical properties of nanomaterials are the characteristics that make them useful to humanity, but they are also the properties that could cause great harm if nanoparticles are improperly researched and regulated accordingly.

For example, one of the obvious physical properties of nanomaterials is that they are extremely small in size. This means that, for their volume, they have a very large surface area, allowing them to reflect various forms of light and radiation, and making them useful in the cleanup of certain environmental disasters like oil spills. However, their size also poses a problem because nanoparticles are so small that they can be absorbed by organic cells through the cell membrane and can bioaccumulate over time, perhaps even altering the genetic makeup of organisms.

---

[1] Defra. A Scoping Study to Identify Gaps in Environmental Regulation for the Products and Applications of Nanotechnologies. http://www2.defra.gov.uk/research/project_data/More.asp?I=CB01075&M=KWS&V=Na. Accessed: 05 October 2006.

[2] EPA Nanotechnology White Paper. Available: http://www.epa.gov/OSA/pdfs/EPA_nanotechnology_white_paper_external_review_draft_12-02-2005.pdf Accessed: 09 September 2006. Pg. 4.

[3] EPA Nanotechnology White Paper. Available: http://www.epa.gov/OSA/pdfs/EPA_nanotechnology_white_paper_external_review_draft_12-02-2005.pdf Accessed: 09 September 2006. Pg. 6.

Nanotechnology has a vast array of applications, many of which have yet to be imagined. In the field of medicine nanotechnology can be used in gene therapy, medicinal delivery, and may offer ways for doctors to target cancer cells and eliminate them from the body. Nanomaterials can also play a role in national defense, many nanoparticles are lightweight and strong and could be used for body and vehicle armor, nanomachines may be used to conduct covert operations, and nanotechnology may develop chemicals are useful to the production of defense-related products.

For all of its uses, nanotechnology, used improperly can be dangerous. Because nanomaterials have the ability to save lives, or destroy them it is important that a reasonable regulatory balance be developed that allows nanomaterials research and use to continue while properly restricting and monitoring those uses that may be dangerous.

The Project

Guided and motivated by OPPT's interests in regulation and interagency cooperation, the contractor, in close consultation with OPPT, sought to assess the institutional knowledge, accumulated research, future plans, and regulatory interests of other government agencies in the area of nanomaterials and nanotechnology. The contractor began with Interagency Testing Committee (ITC) contacts and, through referrals, actual telephone interviews and, in a few cases, written exchanges, were able to make inquiries of a number of different agencies and officials.

Methodology

To gather information, the contractor solicited responses to a survey developed jointly by the contractor and OPPT. The survey was designed for, and generally conducted via, a telephone interview between contractor team members and agency officials.[4] The survey inquired, *inter alia*, about the types of nanomaterials that the respondent agency was working with, the sorts of tests and instrumentation used in the agency's research, and the protocols adopted. Follow-up questions probed into rationales and empirical conclusions underlying these policy choices, particularly where instrumentation, protocols, or other approaches were modified to better apply to the unique properties of nanomaterials. The contractor also sought out any documents, such as articles and reports, that the respondents were willing to share, and has incorporated information gleaned from those documents into this report. Many respondents also suggested other potential contacts, which, in some cases, resulted in even more fruitful interviews.[5]

[4] *See*, *infra*, app. A.
[5] *See*, *infra*, app. B.

The Agencies

BACKGROUND

The agencies we contacted in order to perform this study were drawn from the Nanotechnology Interagency Testing Committee. We contacted or attempted to contact the 16 agencies who are members of this committee as a starting point for our information collecting. Some of the contacts were fruitful and provided us with further contacts while others led to dead ends. Although we were not able to have a conversation with each and every member agency, we feel that the results of this informational survey will act as a solid foundation from which to build interagency communication and cooperation. The following is a list of the agencies on the Interagency Testing Committee. The agencies listed in bold are agencies that we were able to converse with and who we feel have been adequately covered by our study. The unbolded agencies are agencies that were either lacking a contact person, were uncooperative or, because of time constraints and circumstances, were unable to provide us the information we required for the study. The agencies that are bolded are all willing to be contacted with regards to this issue and the other agencies may have useful knowledge to provide.

The member agencies of the Interagency Testing Committee are, as follows:

Council on Environmental Quality (QEC)
National Institute of Standards and Technology (NIST)
National Oceanic and Atmospheric Administration (NOAA)
Environmental Protection Agency (EPA)
National Cancer Institute (NCI)
National Institute of Environmental Health Sciences (NIEHS)
National Institute for Occupational Safety and Health (NIOSH)
National Science Foundation (NSF)
Occupational Safety and Health Administration (OSHA)
Agency for Toxic Substances and Disease Registry (ATSDR)
Consumer Product Safety Commission (CPSC)
Department of Defense (DOD)
Department of Interior (DOI)
Food and Drug Administration (FDA)
National Library of Medicine (NLM)
United States Department of Agriculture (USDA)

AGRICULTURAL RESEARCH SERVICE

The Agricultural Research Service (ARS) is the chief scientific research agency of the United States Department of Agriculture (USDA). The goal of the ARS is to develop and transfer solutions to agricultural problems of high national priority by disseminating and providing information access.[6] Nanomaterials are currently being used in food and agricultural production, peaking ARS interest in the chemical, physical, and functional characteristics of food and

[6] Agricultural Research Service. "About ARS". 17 Jul. 2006. Available: http://www.ars.usda.gov/AboutUs/AboutUs.htm. Accessed: 17 October 2006.

agricultural at the nano-scale. Products produced by these materials have the potential to change the interface of agricultural production as they react with their environment, and as their impact on the non-food world grows and expands.[7]

The ARS is performing tests on a diverse array of nanomaterials. Research is being conducted on nanocomposties and surface mollified clay. For example, the Food and Industrial Oil Research Unit has developed nanocomposites of clay and thermostat resins from vegetable oil. Other research is being done on crystallites, particularly crystallized components of cellulose. Acid treating very clean paper melts away all other particles, leaving only the nanomaterials behind. Cotton derived cellulose has exhibited flame-retardancy, and blending just ten percent of cellulose nanofibrils increased the tensile strength of starch-based plastics by at least five fold. The Eastern Regional Research Center is looking at nanocomposites of silica and pectin to increase the flame-retardancy of paper, and other research by the ARS looks at the magnetic properties of different nanomaterials.[8]

The ARS tests the mechanical properties of different nanomaterials. They will test the durability of plastics, and will look at the cellulos alignment in high security papers. They use several different types of instrumentation. They measure the size and the shape of nanoparticles using both scanning and transmission electron microscopy. Temperature properties of nanomaterials are examined using differential light scattering, and tensile strength and flexibility of plastics are measured using Infstron techniques. The ARS also uses counter light scattering techniques and x-ray analysis to examine nanomaterials.

Funding for nanotechnology at the ARS is highly dependent on Congressional appropriations and often limits their prospective projects. However in the future, ARS anticipates researching nanomaterials as food and drug additives. Nano-scale delivery vehicles can be used to protect nutrient concentrations in hot conditions or adverse pH. Nano-scale additive would provide a fresher taste, stronger aroma, and increase absorption for food nutrients. They are developing nanoemulsions to prevent bacterial contamination of food surfaces, nanopolymers and nanocomposites to provide packaging properties, and edible films to improve functional properties and sensory qualities. They also anticipate research in bioproducts based on renewable materials, and nanofoams which control mite infestation in bees.[9] Interestingly, there are over five different units researching nanotechnology within the ARS, all with different interests.

THE CENTER FOR DISEASE CONTROL

Dr. Daphne Moffett, the Deputy Associate Director for Science, in the Center for Disease Control's (CDC) Division of Unintentional Injury Prevention reported that the agency is interested in toxicity, epidemiology, risk assessment, and public health aspects of nanomaterials,

---

[7] Orts and McHugh. "Biobased Nanomaterials For Industrial and Food Products" Agricultural Research Service. 2006.
[8] Agricultural Research Service. "Briefing Paper on Nanotechnology in the Agricultural Research Service (ARS)". October 2005.
[9] Orts and McHugh. "Biobased Nanomaterials For Industrial and Food Products" Agricultural Research Service. 2006.

but does not currently have a research program.[10] Dr. Moffett suggested that the National Institute for Occupational Safety and Health (NIOSH) might be a good agency to contact.

THE CONSUMER PRODUCTS SAFETY COMMISSION

CPSC is an independent regulatory agency with jurisdiction over consumer products used in or around the home. The potential safety and health risks associated with nanomaterials can be assessed under existing CPSC statutes, regulations and guidelines. Neither the Consumer Product Safety Act (CPSA) nor the Federal Hazardous Substances Act (FHSA) requires a premarket registration or approval of products. Thus, it is not until a product has been distributed in commerce that the CPSC would evaluate a product's potential risk to the public. The chief concern of the CPSC is to assess the safety of products and raise public awareness of possibly dangerous products. Although the CPSC has not done any testing on nanomaterials at this point, the hypothetical that follows serves as an example of how the CPSC would perform such a test.

If nanomaterials were used in mattresses there would be a multi-step process for evaluating the product's safety as it relates to humans. First, the CPSC would devise a toxicological evaluation; basically determine what risks a material may pose and how it may enter the body (absorption through skin, inhalation, ingestion, etc.). In order to test these pathways of entry they would perform experiments that would test the likelihood and feasibility of the different routes of exposure. They would then test what the daily exposure of a consumer would be to the material as it would likely be absorbed through the various pathways. This would be compared to the levels of exposure at which the material is considered to be safe to render a decision as to whether the material is dangerous to humans.[11]

The safety regime in the CPSC is contained largely within the Consumer Product Safety Act. Under the CPSA products are evaluated to determine whether they contain defects that create "a substantial product hazard or warrants proposing that the Commission set a regulation to prevent or reduce unreasonable risk. In the absence of an express regulation, as it does with other consumer products, the staff will look to see whether a defective product composed of or containing nanomaterials creates a substantial risk of injury to the public because of a variety of factor including a pattern defect and the severity of the risk. Manufacturers, retailers, and distributors of nanoproducts have the same reporting obligation as those of other products – they must report immediately to the Commission if they have become aware of a product that fails to comply with a consumer product safety rule; contains a defect that creates a substantial product hazard; or create an unreasonable risk of serious injury or death.

The health regime in the CPSC is outlined by the Federal Health Safety Act, which assesses a product's potential chronic health effects. FHSA is a risk based assessment that considers both acute and chronic hazards. "Hazardous Substance" is defined as toxic, under FHSA, and it must

---

[10] E-mail from Daphne Moffett, Deputy Associate Director for Science, Division of Unintentional Injury Prevention, Center for Disease Control (Nov. 3, 2006, 15:11:24 EST) (on file with author). *See*, *infra*, app. B.
[11] Consumer Product Safety Commission. "Nanomaterial Statement." Available: http://www.cpsc.gov/library/cpscnanostatement.pdf. Accessed: 3 November 2006.

have the potential to cause substantial personal injury during or substantial illness as a result of the product's handling or use.

CPSC assesses chronic hazard data and reviews and updates the chronic hazard guidelines to address, among other things, the use of nanomaterials in consumer products. The first step in the risk assessment process is hazard identification – a review of toxicity data to determine whether the product should be labeled "toxic" under FHSA. If the product is determined to be toxic an exposure and risk assessment is performed to determine whether it is a "hazardous substance." If it is a hazardous substance the FHSA requires cautionary labeling with recommendations of how to handle and use the product. If labeling is determined to be inadequate to protect the public the product may be banned. Pretesting is not required; it is the manufacturer's responsibility to ensure compliance.

In the fields of emerging technologies, like nanotechnology, it is important to adjust the regime to address the issues posed by the product. A growing number of compounds produced using atomic level manipulation. Nanomaterials measure between 1 and 100 nanometers. They often possess dramatically different physical and chemical characteristics then their larger cousins. Some of these materials have begun to be used in consumer products.

Nanomaterials may require unique exposure and risk assessment strategies. The unknowns pose a major challenge because of how different each specific nanomaterial is. CPSC is involved in a number of initiatives to address these concerns. It is one of the federal agencies involved with the Nanoscale Science, Engineering and Technology (NSET) and the Nanotechnology Environmental Health Issues (NEHI). These groups foster interagency communication. It is also a member of a number of public/private initiatives including the American National Standards Institute (ANSI), ASTM International, and the International Life Sciences Institute (ILSI).[12]

DEPARTMENT OF COMMERCE AND THE NATIONAL INSTITUTE OF STANDARDS AND TECHNOLOGY

The Department of Commerce (DOC) and the National Institute of Standards and Technology (NIST) work together to research nanomaterials. The DOC is a regulatory agency charged with fostering, promoting, and developing the foreign and domestic commerce of the United States.[13] Among the techniques used by the DOC to promote its mission is to ensure the effective use and growth of the nation's scientific resources. The NIST is a research agency whose goals in the science and technology closely mirror those of the DOC.

These agencies are currently performing research on carbon nanotubes, colloidal gold nanoparticles and they are doing research on developing nanowires to improve the quality of semiconductors. For nanotubes, NIST is in the process of developing an effective material that consistently produces high quality nanotubes. They use microscopy and thermo gravimetric

[12] Consumer Product Safety Commission. "Nanomaterial Statement." http://www.cpsc.gov/library/cpscnanostatement.pdf. Accessed: 03 November 2006.
[13] United Stated Department of Commerce Website. Available: http://www.commerce.gov/. Accessed: 20 October 2006.

analysis – a mass-based technique – to determine the purity of the materials during manufacture as product is often quite impure as it makes its way through the production process. NIST also catologues the various physical properties of the nanotubes (size, shape, strength, etc.) and uses differential light scattering to study the nanoparticles.

For colloidal gold nanoparticles the NIST looks at physical size measurements and is working with the National Cancer Institute (NCI) at the National Institutes of Health (NIH) to determine a host of other characteristics of the particles. They also gather in vivo and in vitro measurements of the amount of bioaccumulation of nanoparticles in rats caused by varying degrees of exposure. The outcomes in all animals are measured at all levels – from community-wide, to organismal, to organs, to cellular to determine how bioaccumulation affects organisms so that results may be extrapolated to humans.

The NIST has developed a number of protocols for dealing with potentially hazardous substances that it feels it may apply to nanoparticles. The NIST uses differential light scattering to characterize particles and believes that little modification will be necessary to make this work effectively with nanomaterials. They use electron-based microscopy to verify the purity of the substances; this method is very generalizable and requires no modification to analyze nanomaterials. Specifically, for nanotubes, the NIST tests the tensile strength of the substance. They also use the EPA's standards for studying materials and say that these protocols are widely used for almost all substances they encounter. However, some modification of the methods may be necessary.

The NIST has an array of mid-to long term projects involving nanomaterials. They are planning prediction and modeling workshops on the behavior effects of bioaccumulation of nanomaterials in organisms, they are studying nanotube accumulation in trout – both are part of a study that is trying to determine the long term life cycle effects of nanomaterials on animals. They are also trying to determine how quantum dots may be used to target cancer cells in the human body. The latter project fits in with a more general initiative to use nanoscale materials to deliver drugs into the human body.

The NIST is also looking at a variety of physical characterization techniques, including nanoscale 3D imagery, using programs in bioimaging, such as contrast agents. They are also planning on doing some work in the field of biometturology, a process that involves growing nano-sized metals using living organisms.

NATIONAL INSTITUTE OF ENVIRONMENTAL HEALTH SCIENCES

The National Institute of Environmental Heath Sciences (NIEHS) is a scientific research institute under the discretion of the National Institute of Health and the Department of Health and Human Services. The goal of the NIEHS is to understand how the environment effects the progression of disease in human beings.[14] The agency specifically targets nanomaterials as part of their National Toxicology Program (NTP). The NTP has established a Nanotechnology Safety Initiative that "evaluates the toxicological properties of major nanoscale materials classes" and

[14] The National Institute of Environmental Health Services. "Introduction to NIEHS." 6 Jan. 2006. Available: http://www.niehs.nih.gov/external/intro.htm. Accessed: 17 October 2006.

uses these properties to answer fundamental questions about how these materials interact with biological systems.[15] NIEHS is often referred by other agencies as an authority in nanotechnology.

Currently, the NIEHS are performing tests on hydrogenated and hydroxinated fullerenes, quantum dots, and Buckminster fullerenes (C60) using rats and mice. Tests on quantum dots focus on how these nanomaterials move around in the body and penetrate in vivo systems. Tests are also looking at how these nanomaterials penetrate the skin, whether they pose a phototoxic hazard, and oral and pulmonary exposure. To determine how these nanomaterials affect the rats and mice, they focus on survival rates and physical features such as body weight after exposure. These effects are measured on the population, organism, organ, cellular and microscopic levels.

The NIEHS has uses different instrumentation depending on whether or not they are measuring a particle or a chemical. NIEHS uses methods like BET which look at the surface area and core size of nanomaterials. The toxicity protocols they use to evaluate the nanomaterials are based on OECD international guidelines, and are modified depending on functional changes, pathology, and methology. They particularly look at whether or not the nanomaterials are going to targeted organs and the neurological responses of the mice and rats. In the future, the NIEHS will expand their research to include cerium-oxide, dendrimers, and nano-cell silica.

THE NATIONAL LIBRARY OF MEDICINE

The National Library of Medicine or the NLM is the world's largest biomedical library. Located on the grounds of the National Institutes of Health in Bethesda, Maryland, this library uses computer and communication technologies to organize information and provide resources to other libraries and government entities.[16] The library has extensive database systems, PubMed and Medline being its most popular databases. Although the NLM does not specifically research nanomaterials, information on nanotechnology can be found in these databases or in TOXNET® (Toxicology Data Network), a database that looks at harmful products and chemicals that affect the general public. Other sources referenced by the NLM include NIEHS, industry, and Europe.

THE NATIONAL SCIENCE FOUNDATION

Dr. Cynthia Ekstein of the National Science Foundation (NSF) explained that she and her agency were focused on engineering aspects of nanomaterials and had not studied them in the context of general research or regulation.[17]

OCCUPATIONAL SAFETY AND HEALTH ADMINISTRATION

---

[15] Department of Health and Human Services. "National Toxicology Program Nanotechnology Safety Initiative." 28 Feb. 2006. Available: http://ntp.niehs.nih.gov/index.cfm?objectid=7E6B19D0-BDB5-82F8-FAE73011304F542A. Accessed: 18 October 2006.

[16] The National Library of Medicine. "Fact Sheet." 13 Mar 2006. Available: http://www.nlm.nih.gov/pubs/factsheets/nlm.html. Accessed: 17 October 2006.

[17] Telephone Interview with Cynthia Ekstein, National Science Foundation (Nov. 2, 2006). *See*, *infra*, app. B.

The Occupational Safety and Health Administration (OSHA) is interested in nanomaterials to the extent that they impact workplace health and safety. Dr. Loretta Schumann in the agency's Office of Chemical Hazards reported that OSHA is not currently performing tests on any nanomaterials.[18] While the agency does have a laboratory that performs analytical work, at the moment they are just monitoring developments in nanomaterial research, particularly in conjunction with the National Institute for Occupational Safety and Health (NIOSH).

UNITED STATES GEOLOGICAL SURVEY

The United States Geological Survey (USGS), a sub-agency of the Department of Interior, is a scientific research agency that focuses on providing reliable research about earth, minimizing loss of life and property due to natural disasters, and managing water, energy, and biological resources. [19] Within this agency, the Contaminant Biology Program targets the effects and exposure of environmental contaminants. This office has begun research on nanomaterials to address the uncertainty that these materials pose within the environment.

The USGS is currently using different species of fish to determine the toxicity of tubules, quantum dots, and other carbon compounds. By looking at mortality endpoints and behavioral characteristics of different species, the USGS is able to determine how sensitive and tolerant these fish are to nanomaterials. To address nanomaterial toxicity, contaminant biology protocols are often used. Tests have been developed that look at the chemicals in the muscle glottidia. Biomarker screening tests and other genomic tools have also been used to look at responses, and the effects of nanomaterials are tracked on different scales (community, population, organism, genetic, molecular, and cellular).

Dr. Ronald S. Oremland, a Senior Scientist at USGS, has been working with selenium, tellurium, and arsenic, with a general interest in group sixteen elements of the periodic table.[20] Tellurium compounds have significant potential as solar cell materials, as they convert light energy into electrical energy. Dr. Oremland's tests have yielded observations that microbes breathe anions like selenium and tellurium. Within the spectrum of nanomaterials, these particles are quite large, at between twenty and three hundred nanometers. They are also particularly pure, both in form and in that, at the end of the process, they are free of bacteria. An advantage of the process used by Dr. Oremland is that, by using these bacteria, one can create the output materials at room temperature and without the use of dangerous chemicals.[21]

To measure the effects of this bacterial respiration, he has studied quantitative balances between carbon sources. For instrumentation, he has used ultraviolet, visible red and infrared spectroscopy, and noted that selenium spheres look similar but have different spectral properties which are governed by their internal arrangement. At least within the meaning of the question

---

[18] Telephone Interview with Loretta Schuman, Office of Chemical Hazards (Nonmetals) (Oct. 16, 2006). *See*, *infra*, app. B.

[19] United States Geological Survey. "About USGS Home." 2 Oct. 2006. Available: http://www.usgs.gov/aboutusgs/. Accessed: 17 October 2006.

[20] Telephone Interview with Ronald S. Oremland, Senior Scientist, United States Geological Survey (Oct. 31, 2006). *See*, *infra*, app. B.

[21] Ronald S. Oremland et. al., *Structural and Spectral Features of Selenium Nanospheres Produced by Se-Respiring Bacteria*, 70 APPLIED AND ENVIRONMENTAL MICROBIOLOGY 52 (2004).

posed by the contractor's survey, Dr. Oremland is not using any particular protocols, because his study is not concerned with toxicity. He reported that his interest in these materials is generally motivated by scientific curiosity, as opposed to specific regulatory or policy applications.

The USGS has several projects it hopes to work on in the future. The USGS is currently working on instrument research and development. Since nanomaterials are so small, USGS is having difficulty measuring where the nanomaterials are traveling in the organism, and they have not been able to accurately measure exposure because of it. They also intend on looking at metrology and remediation, monitoring and technique analysis, and using biomarkers as indicators in toxicity testing.

Agency Interview Summary

After reviewing all the agency interviews, there are several different consistent factors we found that run throughout.

1. *Information is dependent on agency type*. There are two particular types of agencies we contacted. Some were primarily regulatory and some were primarily research. For example, the USGS, NIEHS, and NIST are research organizations that do experimentation, while OSHA uses their research to write regulations. Knowing where regulatory agencies get their information and who provides that information will be invaluable to finding gaps and progress in nanotechnology research.

2. *Most agencies are researching tubules, quantum dots, or fullerenes*. Some agencies have expanded their research. A research from the US Geological Survey is looking at selenium, tellurium, and arsenic with regards to bacterial processes. NIST is also looking at colloidal gold nano particles and semi-conductors.

3. *Tests address pathology, exposure, physical characteristics, and others in an attempt to address toxicology and hazardousness*. Since pathology looks at where the nanomaterials have traveled and how they get there, agencies like NIEHS will study organs to determine if materials are going to the target organ or are found in other parts of the body. Exposure tests look at inhalation or dermal exposure. The CPSC tests exposure through toxicological evaluation to determine safe rates of exposure. Physical characteristics include the weight of animals- does it change over time? Other tests look at survival rates and behavioral characteristics such as neurological functions.

4. *Most researchers doing experimentation look at effects on several different levels*. Agencies will look first at the community. They then will look at the population, and from there look at individual organisms. After looking at the individual, they will target specific organs and parts of the body. Effects are also addressed on the cellular, molecular, and genetic levels. When doing toxicity research, this is especially important. By doing a thorough analysis, on each of these levels, agencies can ensure that nanomaterials will not adversely affect human health.

5. *Agencies often use protocols that already exist within their own agencies or abroad*. The USGS uses protocols similar to those found in contaminant biology. However agencies such as NIST use EPA toxicity protocols for almost "all the substances they encounter"; agencies like NIEHS use OECD international guidelines. The protocols agencies use are dependent on their particular research question and their area of study. Toxicity calls for certain protocols. However if these protocols are not being used, they are either using their own established protocols or none at all.

6. *There are mixed reviews regarding instrumentation*. Some agencies have not been able to develop proper instrumentation. However agencies such as NIST will use light scattering techniques and electron-based microscopy. The difficulty with instrumentation

lies in the fact that nanomaterials are very different from other materials; they are different from other particles and are different from other nanomaterials. This makes developing instrumentation very costly. If agencies can adapt instrumentation already used in toxicity testing, they will try. However, not all agencies have been able to do this.

7. *Most research agencies anticipate doing future research*. If the agencies we talked to were currently doing research, they fully intended to expand their research. Some regulatory agencies may do future research, but most often they are going to rely on what research agencies produce.

Recommendations

This research shows that nanotechnology is in its infancy with regard to research and regulation. Since the U.S. Environmental Protection Agency is responsible for the evolution of nanotechnology, policy set by this Agency will play a critical role in how nanotechnology is portrayed and used in our future society. Based on the research and interviews performed in this analysis, we have established four policy recommendations that will assist the US EPA in future nanotechnology initiatives.

A nanotechnology information clearinghouse should be established that would allow agencies and other entities to deposit and extract information. Currently, there are over five different government agencies researching nanomaterials and their effects on society. As these agencies expand their research and other agencies develop programs, information sharing will be crucial to funding projects and advancing the field. By establishing an information clearinghouse similar to a Wiki, the EPA will foster collaboration and communication between different agencies. The premise of this clearinghouse is to make all nanotechnology information visible to all government agencies. By depositing and extracting information, agencies can maximize their research funding to answer critical questions not already addressed by other agencies. This will be particularly useful to the EPA who is charged with regulating toxic nanomaterials under the Toxic Substances Act. The clearinghouse will help determine where the EPA should fund research and what regulation measures they should take.

The EPA should continue to use forums as a means of fostering interagency communication. The nanotechnology forums that have included the Interagency Testing Committee (ITC) and other government agencies have been highly successful in the past. These forums have two particular benefits. First, this initiative gives the EPA the opportunity to discuss research being done, and helps answers critical questions about toxicity and properties of nanomaterials that effect humans and the environment. Discussion and personal communication establishes healthy relationships among agencies, and provides a different connection amongst groups that other forms of communication do not offer. Secondly, these forums provide critical contacts to the EPA. This analysis shows that nanotechnology research is not found within any single department or office, but instead is dependent on that agency's specific interests in nanomaterials. Forums give the EPA the opportunity to directly communicate with researchers.

The EPA should continue to encourage and increase academic and private participation in nanotechnology research. There are two specific reasons why the EPA should enlist the support of academic institutions and the private sector. First, these entities are directly affected by government actions. Public academic institution's research is primarily funded through government grants and research and development funding. Private companies will be affected as the EPA and other agencies regulate nanotechnology. Dialogue between the government and these entities would be beneficial to both parties, and would show that the EPA is concerned about the status and well being of these agencies. The second reason why the EPA should enlist the support of these entities is that these entities are conducting their own nanotechnology research. Institutions such as Virginia Tech have been developing nanotechnology in many different ways. They have found that nano-particle dispersion techniques can increase polymers, and they are currently doing research on nano robots that target cancer cells. Private companies

like Agilent Technologies and Asylum research have teamed up to develop nanotechnology measures, and the Center for Innovative Technology has tried to foster communication amongst a wide group (government agencies, private companies, and academic institutions) in an effort to collaborate research, workforce development, technology transfer, and commercialization. Private companies often have more resources than government agencies and often have more expansive programs. The EPA could answer critical questions about nanotechnology by enlisting the help of private companies and academic institutions. Not only would the EPA benefit from such communication, but the entities would be able to express their feelings about research and regulation in a manner conducive to both parties.

The EPA should capitalize on research done by other countries. Europe, and particularly the United Kingdom, has done extensive research on nanomaterials. In June 2003 the government ordered a review of the environmental, ethical, health, safety, and social issues that might result from nanomaterials. [22]Different regulatory gaps have been identified, and European companies and institutions are working diligently on nanotechnology research. According to the Agricultural Research Service, there are Brazilian entities doing research on nanotechnology. Capitalizing on research done by these and other countries would allow the EPA to further expand their knowledge on the safety of nanotechnologies to humans and the environment. The EPA could use this knowledge to further determine what research needs to be done in the future to close the information gap, and ultimately assist in the regulatory approach to nanotechnology within the United States.

[22] Defra. A Scoping Study to Identify Gaps in Environmental Regulation for the Products and Applications of Nanotechnologies. http://www2.defra.gov.uk/research/project_data/More.asp?I=CB01075&M=KWS&V=Na. Accessed: 05 October 2006.

Sources

Agricultural Research Service. "About ARS". Available: http://www.ars.usda.gov/AboutUs/AboutUs.htm

Agricultural Research Service. "Briefing Paper on Nanotechnology in the Agricultural Research Service (ARS)". October 2005.

Chaudry, Qasim. Et al. "A Scoping Study to Identify Gaps in Environmental Regulation for the Products and Applications of Nanotechnologies."

CORDIS. Nanotechnology Homepage. Available: http://cordis.europa.eu/nanotechnology/.

Department of Health and Human Services. "National Toxicology Program Nanotechnology Safety Initiative." Available: http://ntp.niehs.nih.gov/index.cfm?objectid=7E6B19D0-BDB5-82F8-FAE73011304F542A.

German BAuA. "Nanotechnology: Health and Environmental Risks of Nanoparticles." Available: http://cordis.europa.eu/nanotechnology/src/pe_reports_studies.htm. October 2006.

International Council on Nanotechnology. Available: http://icon.rice.edu/research.cfm.

The National Cancer Institute. "Nanotechnology in Cancer: Tools for Relieving Human Suffering." Available: http://nano.cancer.gov/resource_center/tech_backgrounder.asp.

The National Cancer Institute. "Understanding Cancer Series: Nanodevices." Available: http://www.cancer.gov/cancertopics/understandingcancer/nanodevices.

The National Institute of Environmental Health Services. "Introduction to NIEHS." Available: http://www.niehs.nih.gov/external/intro.htm

The National Institute for Occupational Safety and Health. "Nanotechnology at NIOSH." Available: http://www.cdc.gov/niosh/topics/nanotech/default.html.

The National Library of Medicine. "Fact Sheet." Available: http://www.nlm.nih.gov/pubs/factsheets/nlm.html.

The National Nanotechnology Initiative. Available: http://www.nano.gov/.

The National Nanotechnology Initiative. "A Matter of Size: Triennial Review of the National Nanotechnology Initiative." Available: http://www.nap.edu/catalog/11752.html#toc.

The National Nanotechnology Initiative. "Environmental, Health, and Safety Research Needs for Engineered Nanoscale Materials. Available:

http://www.nano.gov/NNI_EHS_research_needs.pdf. September 2006.

Orts and McHugh. "Biobased Nanomaterials For Industrial and Food Products" Agricultural Research Service. 2006.

United Kingdom Defra. "Defra Consultation on Voluntary Reporting Scheme for Engineered Nanomaterials." Available: ftp://ftp.cordis.europa.eu/pub/nanotechnology/docs/defra_nanotechvrs-consultfindings_en.pdf. August 2006.

United States Environmental Protection Agency. "Nanotechnology Whitepaper." Available: http://www.epa.gov/osa/pdfs/EPA_nanotechnology_white_paper_external_review_draft_12-02-2005.pdf. December 2005.

United States Food and Drug Administration. "FDA Considerations for Regulation of Nanomaterial Containing Products. Available: http://www.fda.gov/nanotechnology/powerpoint_conversions/NISTHouston0106_files/textonly/index.html.

United States Food and Drug Administration. "FDA Regulation of Nanotechnology Products." Available: http://www.fda.gov/nanotechnology/powerpoint_conversions/pcastmar04_files/textonly/slide1.html.

United States Geological Survey. "About USGS Home." Available: http://www.usgs.gov/aboutusgs/.

Woodrow Wilson International Center for Scholars. "Project on Emerging Nanotechnologies." Available: http://www.wilsoncenter.org/index.cfm?topic_id =166192&fuseaction=topics.event_summary&event_id=194810#.

Appendix A – Survey Script

Hello. My name is [name] and I am a graduate student at the College of William and Mary's Public Policy Program. We are assisting EPA's Office of Pollution Prevention and Toxics in learning more about what existing research and institutional knowledge there is on nanomaterials. OPPT is interested in ongoing and planned research on health and ecological effects, and environmental fate. EPA has given us your name as a contact point for information on nanomaterials research at [agency or office].

- What nanomaterials are you working with/performing tests on?
- What kind of tests are you doing?
- How do you plan to measure effects?
- What protocols have you adopted? Could you give us a little background on why you chose that/those protocols? Do you know if these protocols will generate reliable data on nanomaterials?
- What instruments will you use and what modifications, if any, have you had to make to adapt the instrumentation for nanomaterials?
- What information do you have to support that this instrumentation will allow you to measure effects of nanomaterials?
- Are documents that could assist us available electronically?
- Do you have a website?
- What are you thinking about researching in the near future? Long term?
- Are there other people in the organization to contact? Any other division or specialized person that we can discuss the topic with?
- As we collect more information we may have follow up questions. May we contact you again if we need additional information?
- Thank you for talking with us today. If you want to discuss anything, please contact [name and contact information]

Appendix B – Agency Interview Records

Agency: National Institute of Environmental Health Services	*Common Name:* NIEHS	*Type:* Research
Contact: Nigel Walker	*Title and Office:* Lead Scientist for National Toxicology Programs Safety Initiative	
Phone number: (919) 541-4893 *Fax number:* (301) 451-5596	*Email:* walker3@niehs.nih.gov	*Calling Date*: 10/16/2006

1. *What nanomaterials are you working with/performing tests on?*

   NIEHS is performing tests on hydrogenated and hydroxinated fullerenes, quantum dots, and C60 (Bucky Balls).

2. *What kind of tests are you doing?*

   Tests are being done to determine how quantum dots move around the body and penetrate in vivo systems. Some tests are also looking at how these nanomaterials penetrate the skin and whether they pose a phototoxic hazard. In regards to C60, NIEHS is looking at general toxicity, focusing on oral and pulmonary exposure.

3. *How do you plan to measure effects?*

   Currently, they are doing experiments with rats and mice. To measure effects they are looking at survival, on a population scale, after exposure. They are trying to determine if the animals die at natural rates, but they are focusing on survival rates, not endpoints. They also look at body weight to determine the direct effects. They look at effects from the population to organism level, organ (weight, increase of liver weight, entropy of organ) to cellular level, and cellular level to microscopic level (changes in genes or protein expressions as well as enzyme levels).

4. *What protocols have you adopted? Could you give us a little background on why you chose that/those protocol(s)? Do you know if these protocols will generate reliable data on nanomaterials?*

   In their research, they follow the same general guidelines. Particularly they use OECD international guidelines to conduct studies. Within the guidelines there are default study guides for different length studies, and they tend to start from this point. In addition to the default, they may modify depending on functional changes, pathology, and methodology. They particularly will look at the functional changes or just the base level of survival/body weight. This includes the gold standard that is indicative of the whole pathology, organs that are non-target organs (pathology), and neurological responses.

5. *What instruments will you use and what modifications, if any, have you had to make to adapt the instrumentation for nanomaterials?*

   Instruments depend on what you are measuring. They do exposure-inhalation studies, but you have to know what you are exposing. This means you have to know the general composition of the atmosphere and the atmosphere you create. They use different instruments depending on if they are looking at a particle or a chemical. Other methodologies include purity. They use PEM (partial energy ratio for Microarray) and BET (the Brunauer, Emmett, Tellor) methods. The BET method focuses on looking at the surface area and core size.

6. *What information do you have to support that this instrumentation will allow you to measure the effects of nanomaterials?*

   Did not ask question.

7. *Are documents that could assist us available electronically?*

   They do not have any final documents, so there is nothing available electronically.

8. *Do you have a website?*

   Yes, the Nanotech Safety website found at:
   http://ntp.niehs.nih.gov/index.cfm?objectid=7E6B19D0-BDB5-82F8-FAE73011304F542A

9. *What are you thinking about researching in the near future? Long term?*

   They are planning on researching cerium-oxide, dendrimers, and nano-cell silica.

10. *Are there other people in the organization to contact? (any other division or specialized person that we can discuss the topic with)*

    To discuss methodologies for chemical analysis, talk to the Cynthia Smith, the lead chemist. Her phone number is 541-3473. To discus general approaches to immunotoxicology, talk to Gerbolic at 541-3230.

11. *As we collect more information, we may have follow-up questions. May we contact you again if we need additional information?*

    Yes. Since he is the lead, he should be able to answer any questions that we have.

Appendix B – Agency Interview Records

Agency: Occupational Safety and Health Administration	*Common Name:* OSHA	*Type:* Regulatory
Contact: Loretta Schuman	*Title and Office:* Office of Chemical Hazards (Nonmetals)	
Phone number: (202) 693-2290 *Fax number:*	*E-mail:* schuman.loretta@dol.gov	*Calling Date*: 10/16/06

1. *What nanomaterials are you working with/performing tests on?*

None.

2. *What kind of tests are you doing?*

None. While they have a laboratory that does analytical work, right now they are just keeping an eye on nanomaterial research done by other agencies like NIOSH.

3. *How do you plan to measure effects?*

4. *What protocols have you adopted? Could you give us a little background on why you chose that/those protocol(s)? Do you know if these protocols will generate reliable data on nanomaterials?*

5. *What instruments will you use and what modifications, if any, have you had to make to adapt the instrumentation for nanomaterials?*

6. *What information do you have to support that this instrumentation will allow you to measure the effects of nanomaterials?*

7. *Are documents that could assist us available electronically?*

8. *Do you have a website?*

9. *What are you thinking about researching in the near future? Long term?*

10. *Are there other people in the organization to contact? (any other division or specialized person that we can discuss the topic with)*

11. *As we collect more information, we may have follow-up questions. May we contact you again if we need additional information?*

Yes, Dr. Schuman would be happy to speak with us again.

Appendix B – Agency Interview Records

Agency: United States Geological Survey	*Common Name:* USGS	*Type:* Research
Contact: Sarah Gerould	*Title and Office:* Bureau Program Coordinator, Contaminant Biology Program	
Phone number: (703) 648-6895 *Fax number:*(703) 648-4238	*E-mail:* sgerould@usgs.gov	*Calling Date*: 10/16/2006

1. *What nanomaterials are you working with/performing tests on?*

At present, the USGS is performing tests on tubules and quantum dots. USGS also intends on working with other types of carbon compounds.

2. *What kind of tests are you doing?*

Currently, USGS is performing toxicity tests on different fish species. Particularly, they are looking at bacterial formation of quantum dots.

3. *How do you plan to measure effects?*

They are not exactly sure what measurements they will use to measure the effects. They will look at mortality end points and behavioral characteristics. By looking at several different species of fish, they will be able to determine which are more tolerant or more sensitive to the different nanomaterials.

4. *What protocols have you adopted? Could you give us a little background on why you chose that/those protocol(s)? Do you know if these protocols will generate reliable data on nanomaterials?*

They have developed protocols similar to those found in contaminant biology. They have developed tests that look at toxicity of chemicals to muscle glottidia. They also have developed biomarker screening tests and other genomic tools that look at a variety of responses in fish and wildlife. They look at effects on the cellular, molecular, genetic, organism, and community level.

Since nano is a much smaller subset, it is difficult to measure effects. They are having a difficult time confirming if substances are getting into the organism, and they haven't been able to measure exposure. The program is doing work on excretion or elimination rates. They are trying to get a better handle on the dose in their laboratory work.

5. *What instruments will you use and what modifications, if any, have you had to make to adapt the instrumentation for nanomaterials?*

They really haven't gotten that far. There are other members of USGS, Chris Engersal and Don Tillet, who are working on this.

6. *What information do you have to support that this instrumentation will allow you to measure the effects of nanomaterials?*

The USGS has not developed instrumentation.

7. *Are documents that could assist us available electronically?*

Chris or Don might have electronic documents.

8. *Do you have a website?*

There is nothing on the USGS

9. *What are you thinking about researching in the near future? Long term?*

They intend on looking at metrology and remediation issues. They are developing a large program for toxicity testing and using biomarkers as indicators. Other projects include looking at monitoring and technique analysis.

10. *Are there other people in the organization to contact? (any other division or specialized person that we can discuss the topic with)*

Ron Oremland is doing work on quantum dots. His phone number is 650-329-4482.

11. *As we collect more information, we may have follow-up questions. May we contact you again if we need additional information?*

*Note: Sara Gerould has been very helpful answering questions about contacts after the interview was conducted.

Appendix B – Agency Interview Records

Agency: Department of Commerce / National Institute of Standards and Technology	*Common Name:* Commerce / NIST	*Type:* Regulation (Commerce) Research (NIST)
Contact: Dr. Dianne Poster and Dr. John Small	*Title and Office:* Vice Chair of Interagency Testing Committee Nanotechnology Environmental and Health Implications Working Group	
Phone number: 301-713-3028 ext. 158 *Fax number:* 301-713-4388	*E-mail:* dianne.poster@nist.gov	*Calling Date*: 10/24/2006

1. *What nanomaterials are you working with/performing tests on?*

- Carbon Nanotubes
- Colloidal Gold Nano Particles
- Semi Conductors

2. *What kind of tests are you doing?*

For nanotubes, NIST is in the process of developing an effective material that consistently produces high quality nanotubes. They use microscopy and thermo gravimetric analysis – a mass-based technique – to determine the purity of the materials during manufacture. Often the product is quite impure as it makes its way through the production process. NIST also catalogues the various physical properties of the nanotubes (size, shape, strength, etc.) and uses differential light scattering to study the nanoparticles.

For colloidal gold nanoparticles the NIST looks at physical size measurements and is working with the National Cancer Institute at the National Institutes of Health to determine a host of other characteristics of the particles. They also study in vivo and In Vitro measurements of the amount of bioaccumulation in rats caused by varying degrees of exposure.

3. *How do you plan to measure effects?*

Most of the results are rather self-explanatory. But they measure outcomes in animals at all levels – from community-wide, to organismal, to organs, to cellular to determine how bioaccumulation affects organisms so that results may be extrapolated to humans.

4. *What protocols have you adopted? Could you give us a little background on why you chose that/those protocol(s)? Do you know if these protocols will generate reliable data on nanomaterials?*

The NIST uses differential light scattering to characterize particles and believes that little modification will be necessary to make this work effectively with nanomaterials. They use electron-based microscopy as well, and use this method to verify the purity of the substances; this method is very generalizable and requires no modification to analyze nanomaterials.

Specifically, for nanotubes, the NIST tests the tensile strength of the substance. They also use the EPA's standards for studying materials and say that these protocols are widely used for almost all substances they encounter. However, some modification of the methods may be necessary.

5. *What instruments will you use and what modifications, if any, have you had to make to adapt the instrumentation for nanomaterials?*

6. *What information do you have to support that this instrumentation will allow you to measure the effects of nanomaterials?*

7. *Are documents that could assist us available electronically?*

- www.nano.gov
- http://www.isd.mel.nist.gov/meso_micro/nanotribweb.pdf
- http://www.nano.gov/NNI_EHS_research_needs.pdf
- http://cnst.rice.edu/
- http://ncl.cancer.gov/

8. *Do you have a website?*

www.nist.gov

9. *What are you thinking about researching in the near future? Long term?*

The NIST has an array of mid-to long term projects involving nanomaterials. They are planning prediction and modeling workshops on the behavior effects of bioaccumulation of nanomaterials in organisms, they are studying nanotube accumulation in trout – both are part of a study that is trying to determine the long term life cycle effects of nanomaterials on animals. They are also trying to determine how quantum dots may be used to target cancer cells in the human body. The latter project fits in with a more general initiative to use nanoscale materials to deliver drugs into the human body.

The NIST is also looking at a variety of physical characterization techniques, including nanoscale 3D imagery, using programs in bioimaging, such as contrast agents.

Some other long-term initiatives relate to nanowire growth for semi-conductors and analysis of cellular biometurrology (growing metals using living organisms).

10. *Are there other people in the organization to contact? (any other division or specialized person that we can discuss the topic with)*

Dr. Poster is the organizational leader of the program and has vast research knowledge and Dr. Small added a great deal of knowledge on the research end as well. These two people are the authorities to speak to when trying to glean information on the NIST's involvement in nanotechnology research.

11. *As we collect more information, we may have follow-up questions. May we contact you again if we need additional information?*

Yes.

Agency: United States Geological Survey	*Common Name:* USGS	*Type:* Research
Contact: Ronald S. Oremland	*Title and Office:* Senior Scientist	
Phone number: (650) 329-4482	*E-mail:* roremlan@usgs.gov	*Calling Date*: 10/31/2006

1. *What nanomaterials are you working with/performing tests on?*

Dr. Oremland has been working with selenium, tellurium, and arsenic. He is generally interested in group 16 elements of the periodic table.

Tellurium compounds have significant potential as solar cell materials, as they convert light energy into electrical energy.

2. *What kind of tests are you doing?*

Microbes breathe anions like selenium and tellurium. This process has taken a carbon source to selenate to solenite to elemental selenium. Though large at between twenty nanometers and three hundred nanometers, these are purified – free of bacteria and pure in form. An advantage of this process is that, by using bacteria, one can create these materials at room temperature and without the use of dangerous chemicals.

3. *How do you plan to measure effects?*

He measures their breathing using quantitative balances between carbon sources.

4. *What protocols have you adopted? Could you give us a little background on why you chose that/those protocol(s)? Do you know if these protocols will generate reliable data on nanomaterials?*

Dr. Oremland is not using any particular protocols (within the meaning of the question), as his study is not concerned with toxicity. His interest in these materials is generally motivated by scientific curiosity, as opposed to specific regulatory or policy applications.

5. *What instruments will you use and what modifications, if any, have you had to make to adapt the instrumentation for nanomaterials?*

6. *What information do you have to support that this instrumentation will allow you to measure the effects of nanomaterials?*

He has used UV visible red and infrared spectroscopy. Selenium spheres look similar but have different spectral properties, which are governed by their internal arrangement.

7. *Are documents that could assist us available electronically?*

Dr. Oremland provided us with an article. Ronald S. Oremland et. al., *Structural and Spectral Features of Selenium Nanospheres Produced by Se-Respiring Bacteria*, 70 APPLIED AND ENVIRONMENTAL MICROBIOLOGY 52 (2004).

8. *Do you have a website?*

The agency's website is: http://www.usgs.gov/

9. *What are you thinking about researching in the near future? Long term?*

10. *Are there other people in the organization to contact? (any other division or specialized person that we can discuss the topic with)*

No.

11. *As we collect more information, we may have follow-up questions. May we contact you again if we need additional information?*

Dr. Oremland said that he would be happy to speak with us further.

Appendix B – Agency Interview Records

Agency: Consumer Product Safety Commission	*Common Name:* CPSC	*Type:* Regulatory
Contact: Dr. Treye Thomas	*Title and Office:* Member of International Council on Nanotechnology (ICON)	
Phone number: 301-504-7738 *Fax number:* 301-504-0079	*E-mail:* tthomas@cspc.gov	*Calling Date*: 11/01/2006

1. *What nanomaterials are you working with/performing tests on?*

Not performing tests right now as they are not a research group. They basically assess the safety of products and raise public awareness of possible issues.

2. *What kind of tests are you doing?*

N/A

3. *How do you plan to measure effects?*

For instance, if nanomaterials were used in mattresses there would be a multi-step process for evaluating the products safety as it relates to humans. First, they would devise a toxicological evaluation; basically determine what risks a material may pose and how it may enter the body (absorption through skin, inhalation, ingestion, etc.). In order to test these pathways of entry they would perform experiments that would test the likelihood and feasibility of the different routes of exposure.

They would then test what the daily exposure of a consumer would be to the material as it would likely be absorbed through the various pathways. This would be compared to the levels of exposure at which the material is considered to be safe to render a decision as to whether the material is dangerous to humans.

4. *What protocols have you adopted? Could you give us a little background on why you chose that/those protocol(s)? Do you know if these protocols will generate reliable data on nanomaterials?*

The following is derived from the Consumer Product Safety Commission's nanomaterial statement.

CPSC is an independent regulatory agency with jurisdiction over consumer products used in or around the home. The potential safety and health risks associated with nanomaterials can be assessed under existing CPSC statutes, regulations and guidelines. Neither the Consumer Product Safety Act (CPSA) nor the Federal Hazardous Substances Act (FHSA) requires a premarket registration or approval of products. Thus, it is not until a product has been distributed in commerce that the CPSC would evaluate a product's potential risk to the public.

The safety regime in the CPSC is contained largely within the Consumer Product Safety Act. Under the CPSA products are evaluated to determine whether they contain defects that create "a substantial product hazard or warrants proposing that the Commission set a regulation to prevent or reduce unreasonable risk. In the absence of an express regulation, as it does with other consumer products, the staff will look to see whether a defective product composed of or containing nanomaterials creates a substantial risk of injury to the public because of a variety of factor including a pattern defect and the severity of the risk. Manufacturers, retailers, and distributors of nanoproducts have the same reporting obligation as those of other products – they must report immediately to the Commission if they have become aware of a product that fails to comply with a consumer product safety rule; contains a defect that creates a substantial product hazard; or create an unreasonable risk of serious injury or death.

The health regime in the CPSC is outlined by the Federal Health Safety Act, which assesses a product's potential chronic health effects. FHSA is a risk based assessment that considers both acute and chronic hazards. "Hazardous Substance" is defined as toxic, under FHSA, and it must have the potential to cause substantial personal injury during or substantial illness as a result of the product's handling or use.

CPSC assesses chronic hazard data and reviews and updates the chronic hazard guidelines to address, among other things, the use of nanomaterials in consumer products. The first step in the risk assessment process is hazard identification – a review of toxicity data to determine whether the product should be labeled "toxic" under FHSA. If the product is determined to be toxic an exposure and risk assessment is performed to determine whether it is a "hazardous substance." If it is a hazardous substance the FHSA requires cautionary labeling with recommendations of how to handle and use the product. If labeling is determined to be inadequate to protect the public the product may be banned. Pretesting is not required; it is the manufacturer's responsibility to ensure compliance.

In the fields of emerging technologies, like nanotechnology, it is important to adjust the regime to address the issues posed by the product. A growing number of compounds produced using atomic level manipulation. Nanomaterials measure between 1 and 100 nanometers. They often possess dramatically different physical and chemical characteristics then their larger cousins. Some of these materials have begun to be used in consumer products.

Nanomaterials may require unique exposure and risk assessment strategies. The unknowns pose a major challenge because of how different each specific nanomaterial is. CPSC is involved in a number of initiatives to address these concerns. It is one of the federal agencies involved with the Nanoscale Science, Engineering and Technology (NSET) and the Nanotechnology Environmental Health Issues (NEHI). These groups foster interagency communication. It is also a member of a number of public/private initiatives including the American National Standards Institute (ANSI), ASTM International, and the International Life Sciences Institute (ILSI).

5. *What instruments will you use and what modifications, if any, have you had to make to adapt the instrumentation for nanomaterials?*

The CPSC would start with the principles articulated in that agency's nanostatement and would use those principles to guide them through the research stages. Some of the analytical approaches may need to be altered, but they are still in the development phase and are not sure if the standard operating procedure is extensive at this time.

6. *What information do you have to support that this instrumentation will allow you to measure the effects of nanomaterials?*

Still working on this part of development. This is a major challenge as each nanomaterial is different and the equipment needed is usually very specialized. Thus there would be a large expense form not too much of a benefit as each nanomaterial may require its own battery of tests beyond the normal protocol of toxicity testing.

7. *Are documents that could assist us available electronically?*

http://www.cpsc.gov/LIBRARY/CPSCNanoStatement.pdf

8. *Do you have a website?*

http://www.cpsc.gov/

9. *What are you thinking about researching in the near future? Long term?*

The CPSC is interested in performing exposure test assessments along the lines of what is described in the mattress example listed under question 3. The CPSC is also interested in cooperating with other agencies to develop a comprehensive strategy for regulating nanomaterials.

10. *Are there other people in the organization to contact? (any other division or specialized person that we can discuss the topic with)*

Dr. Thomas is the leader of the nanotechnology team at the Consumer Product Safety Commission.

11. *As we collect more information, we may have follow-up questions. May we contact you again if we need additional information?*

Yes.

Appendix B – Agency Interview Records

Agency: National Science Foundation	*Common Name:* NSF	*Type:* Engineering
Contact: Cynthia Ekstein	*Title and Office:*	
Phone number: (703) 292-7941 *Fax number:*	*E-mail:* cekstein@nsf.gov	*Calling Date*: 11/02/06

1. *What nanomaterials are you working with/performing tests on?*

She is involved with engineering but not health and safety research.

2. *What kind of tests are you doing?*

3. *How do you plan to measure effects?*

4. *What protocols have you adopted? Could you give us a little background on why you chose that/those protocol(s)? Do you know if these protocols will generate reliable data on nanomaterials?*

5. *What instruments will you use and what modifications, if any, have you had to make to adapt the instrumentation for nanomaterials?*

6. *What information do you have to support that this instrumentation will allow you to measure the effects of nanomaterials?*

7. *Are documents that could assist us available electronically?*

8. *Do you have a website?*

9. *What are you thinking about researching in the near future? Long term?*

10. *Are there other people in the organization to contact? (any other division or specialized person that we can discuss the topic with)*

Dr. Ekstein recommended that we contact NIST.

11. *As we collect more information, we may have follow-up questions. May we contact you again if we need additional information?*

She said that she would be happy to speak with us further.

Appendix B – Agency Interview Records

Agency: Center for Disease Control	*Common Name:* CDC	*Type:* Research
Contact: Daphne Moffett	*Title and Office:* Deputy Associate Director for Science, Division of Unintentional Injury Prevention	
Phone number: (770) 488-4019 *Fax number:*	*E-mail:* zzc0@cdc.gov	*Calling Date*: email on 11/03/06

1. *What nanomaterials are you working with/performing tests on?*

The agency is interested in toxicity, epidemiology, risk assessment, and public health aspects of nanomaterials, but does not currently have a research program.

2. *What kind of tests are you doing?*

3. *How do you plan to measure effects?*

4. *What protocols have you adopted? Could you give us a little background on why you chose that/those protocol(s)? Do you know if these protocols will generate reliable data on nanomaterials?*

5. *What instruments will you use and what modifications, if any, have you had to make to adapt the instrumentation for nanomaterials?*

6. *What information do you have to support that this instrumentation will allow you to measure the effects of nanomaterials?*

7. *Are documents that could assist us available electronically?*

8. *Do you have a website?*

9. *What are you thinking about researching in the near future? Long term?*

10. *Are there other people in the organization to contact? (any other division or specialized person that we can discuss the topic with)*

Dr. Moffett suggested that we contact NIOSH.

11. *As we collect more information, we may have follow-up questions. May we contact you again if we need additional information?*

Dr. Moffett said that she would be happy to speak with us further.

Appendix B – Agency Interview Records

Agency: National Library of Medicine	*Common Name:* NLM	*Type:*
Contact: Vera Hudson	*Title and Office:* Biologist, Office of Hazardous Substances Information	
Phone number: (301) 496-5022 *Fax number:* (301) 480-3537	*E-mail:* vh21q@NIH.GOV	*Calling Date*: 11/27/06

The National Library of Medicine does not do any particular research on nanotechnology. Vera Hudson explained that there are several different sources that give pertinent and helpful information on nanotechnology. There are two particular databases, PubMed and Medline, that she thought would be particularly useful. She also referenced the National Toxicology Program, a NIEHS initiative, the National Cancer Institute, and the Consumer Product Safety Commission as viable nanotechnology resources. She also claimed industry and Europe as good sources. She recently came back from a conference held by the American College of Toxicology (November 5-8 in Indian Wells, California) where they had major sessions on Nanotechnology.

Appendix B – Agency Interview Records

Agency: US Department of Agriculture, Agricultural Research Service	*Common Name:* ARS	*Type:* Research
Contact: William J. Orts, PhD	*Title and Office:* Research Leader, Bioproduct Chemistry and Engineering, USDA-ARS-WRRC	
Phone number: 510-559-5730 *Cell:* 510-508-5730 *Fax number:* 510- 559-5818	*E-mail:* orts@pw.usda.gov	*Calling Date*: 11/29/06

1. *What nanomaterials are you working with/performing tests on?*

The office is mostly working with organic materials. One guy is working on surface mollified clay. After mining the materials, they have to surface mollify to be useful. The office also is looking at crystallites, particularly crystallized components of cellulose. They get these particles by acid treating very clean paper. Anything that is not a nano particle is melted away during the process. They also have charged these products and have given them magnetic properties. The office is also performing tests on starch nano crystals. After beating the starch, they do some mechanical and some acid tests.

2. *What kind of tests are you doing?*

They mostly test the mechanical properties of the different nanomaterials. They test the durability of plastics with nanomaterials. For example, they add starch to biodegradable plastics to add stiffness. Starch and crystallites can change the strength of plastics 10 to 50 fold. For high security papers, they look at cellulose alignment.

3. *How do you plan to measure effects?*

They measure the effects using instrumentation. See question five.

4. *What protocols have you adopted? Could you give us a little background on why you chose that/those protocol(s)? Do you know if these protocols will generate reliable data on nanomaterials?*

The office does not do any tests on toxicity and therefore do not use any toxicity protocols. Most of the stuff they test is natural and has already been approved by the FDA (use particles similar to those used in makeups). They do follow a safety protocol. They run all their tests in a fume hood and generally are masked. They are particularly careful when working with asbestos. Because asbestos can harm the lungs during inhalation or the skin due to exposure, they wear masks and gloves.

5. *What instruments will you use and what modifications, if any, have you had to make to adapt the instrumentation for nanomaterials?*

They plan to measure effects using different instruments. They measure the particles by using scanning electron and transmission electron microscopy. These two electron microscopes determine the size and shape of the nanomaterials. They also use culture counter light scattering techniques. They look at temperature properties by using differential scanning color, and they measure the tensile strength and flexibility of plastic by using Infstron. Infstron measures the force it takes to break the piece of plastic. The office also uses x-ray analysis.

6. *What information do you have to support that this instrumentation will allow you to measure the effects of nanomaterials?*

Particles are already being used in other cases.

7. *Are documents that could assist us available electronically?*

The Food and Science group is coming up with a brochure. Please see the paper entitled "Nanotechnology for Industrial and Food Uses".

8. *Do you have a website?*

They do not have a website dedicated to nanomaterials. The Cooperative State Research, Education, and Extension Service has a National Research Initiative in "Nanoscale Science and Engineering for Agriculture and food systems. Information for these services can be found at:

www.csrees.usda.gov/ProgView.cfm?prnum=4419
www.csrees.usda.gov/fo/fundview.cfm?fonum=1111

9. *What are you thinking about researching in the near future? Long term?*

They try to expand their nanotechnology work every year, but funding is dependent on Congressional appropriations. There are several different projects they are working on now and things they anticipate working on in the future. Currently they are looking at electroconductive properties of different nanomaterials. Projects in the near term include perfecting good drug delivery and flavor delivery devices. They want to look at their efficacy and prove that they are safe.

Other projects include looking at hetinol and nanofoam. The nanofoam is used in bee hives to help control mite populations on bees. The chemical they are using now are extremely volatile. Thus they are trying to produce a chemical that has a slow release to address this. The other project they will work on in the future is nanocomposites. Nanocomposites use crystals to strengthen plastics by changing stiffness.

10. *Are there other people in the organization to contact? (any other division or specialized person that we can discuss the topic with)*

Currently there are two other people working in their office on nanomaterials. They come from a Nanotech Center in Brazil. One of them is Louis Metoso. Louis phone contact information is 510-559-5805 and e-mail is lmattoso@pw.usda.gov.

They also have contact with a Nobel Laureate who is one of the lead researchers on nanotechnology electro conduction.

11. As we collect more information, we may have follow-up questions. May we contact you again if we need additional information?

Yes. Dr. Ortz would be glad to answer any further questions.

Nanotechnology Needs Assessment

Matt DeLesDernier
Gwen Kennedy
Randy Neice

Introduction

- Introduction
- Outline
- Policy Context
- Agency Connections and Interview Reports
- Summary
- Recommended Actions
- Questions

- The Environmental Protection Agency
- Nanotechnology
- Broad goals of our project
- Brief recap of our project up to this point

Outline

- Introduction
- Outline
- Policy Context
- Agency Connections and Interview Reports
- Summary
- Recommended Actions
- Questions

1. Policy Context
2. Agency Connections and Interview Reports
3. Summary
4. Recommendations
5. Questions

Policy Context

- Introduction
- Outline
- Policy Context
- Agency Connections and Interview Reports
- Summary
- Recommended Actions
- Questions

- Two Broad Goals
  - Regulation
    - Health
    - Environment
    - Preserving competitive business environment
  - Interagency Cooperation

Agency Connections and Interview Reports

- Introduction
- Outline
- Policy Context
- Agency Connections and Interview Reports
- Summary
- Recommended Actions
- Questions

Contractor TJPPP

Thomas Jefferson Program in Public Policy

Agency Connections and Interview Reports

- Introduction
- Outline
- Policy Context
- Agency Connections and Interview Reports
- Summary
- Recommended Actions
- Questions

Contractor TJPPP → EPA OPPT

OPPT
Office of Pollution Prevention and Toxics

Agency Connections and Interview Reports

- Introduction
- Outline
- Policy Context
- Agency Connections and Interview Reports
- Summary
- Recommended Actions
- Questions

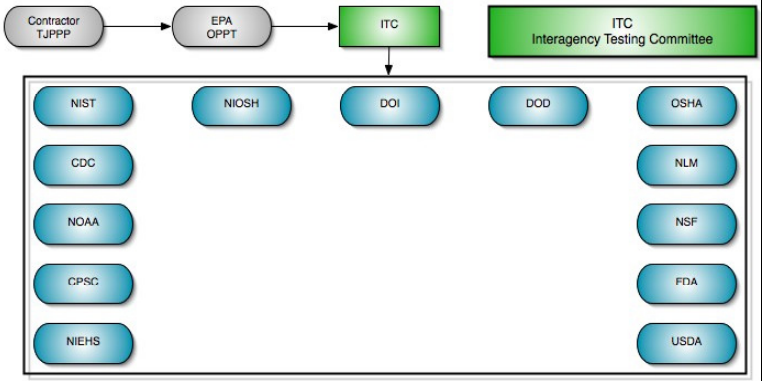

Agency Connections and Interview Reports

- Introduction
- Outline
- Policy Context
- Agency Connections and Interview Reports
- Summary
- Recommended Actions
- Questions

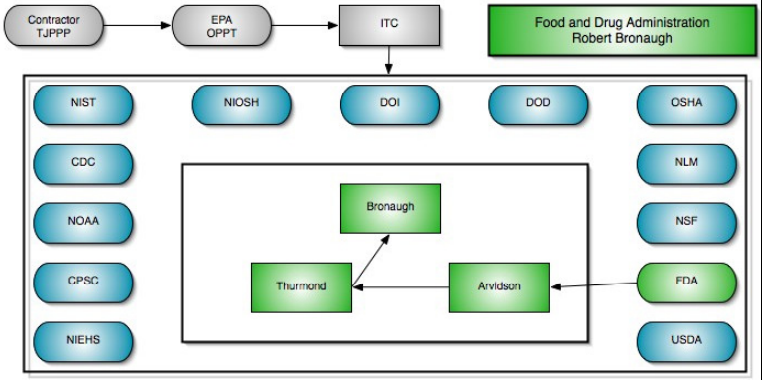

Agency Connections and Interview Reports

- Introduction
- Outline
- Policy Context
- Agency Connections and Interview Reports
- Summary
- Recommended Actions
- Questions

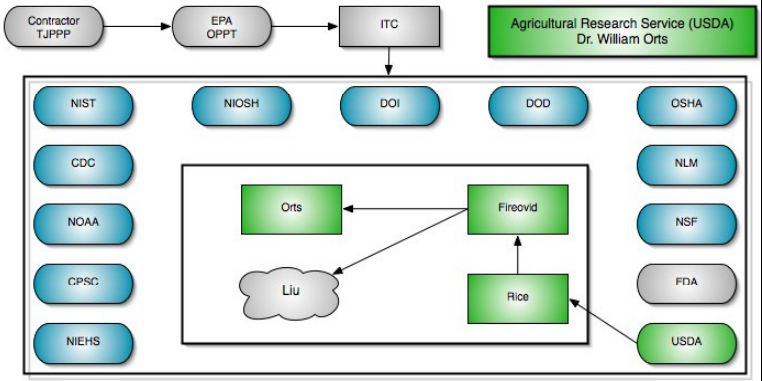

Agency Connections and Interview Reports

- Introduction
- Outline
- Policy Context
- Agency Connections and Interview Reports
- Summary
- Recommended Actions
- Questions

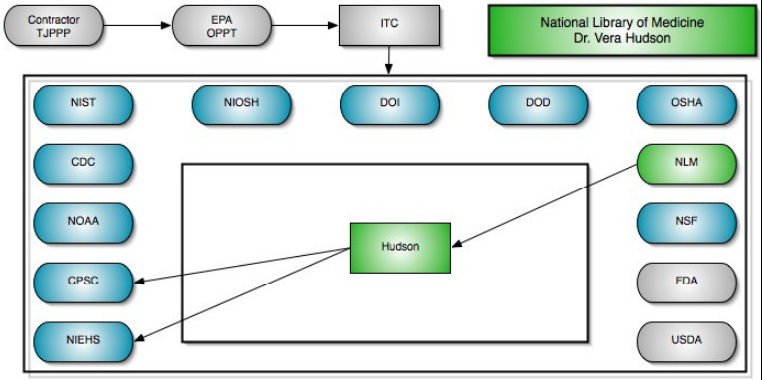

Agency Connections and Interview Reports

- Introduction
- Outline
- Policy Context
- Agency Connections and Interview Reports
- Summary
- Recommended Actions
- Questions

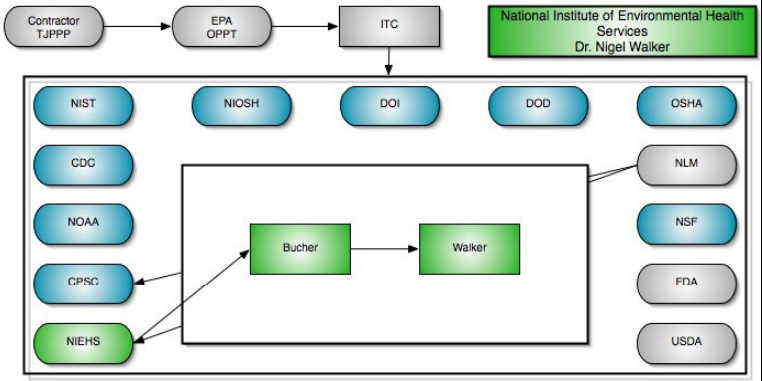

Agency Connections and Interview Reports

- Introduction
- Outline
- Policy Context
- Agency Connections and Interview Reports
- Summary
- Recommended Actions
- Questions

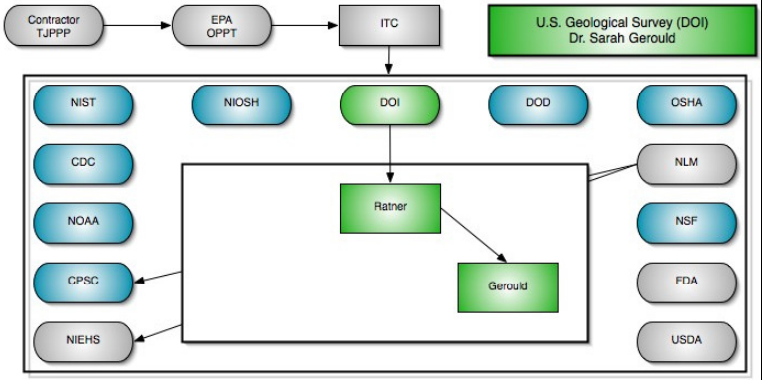

Agency Connections and Interview Reports

- Introduction
- Outline
- Policy Context
- Agency Connections and Interview Reports
- Summary
- Recommended Actions
- Questions

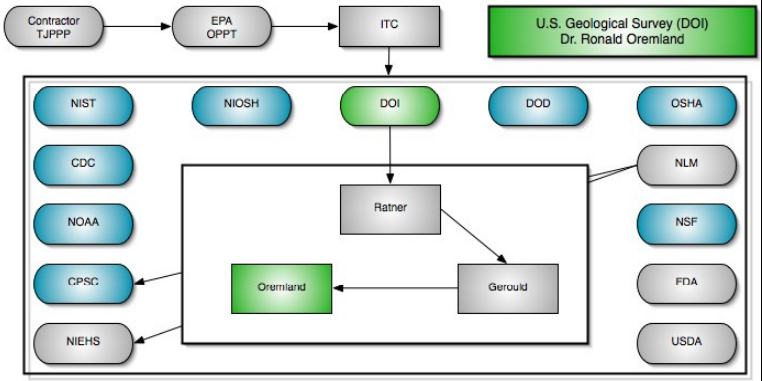

Agency Connections and Interview Reports

- Introduction
- Outline
- Policy Context
- Agency Connections and Interview Reports
- Summary
- Recommended Actions
- Questions

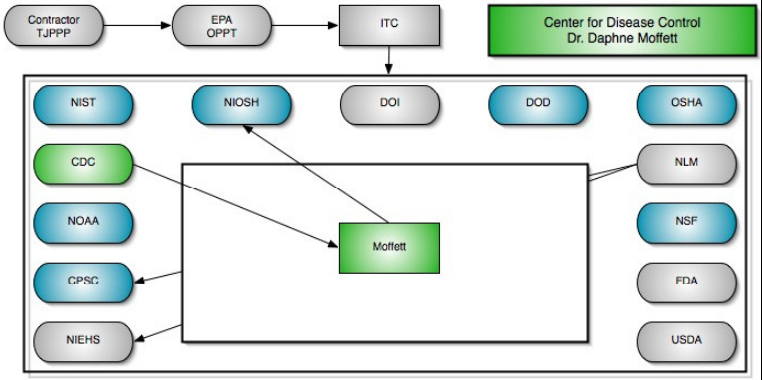

Agency Connections and Interview Reports

- Introduction
- Outline
- Policy Context
- Agency Connections and Interview Reports
- Summary
- Recommended Actions
- Questions

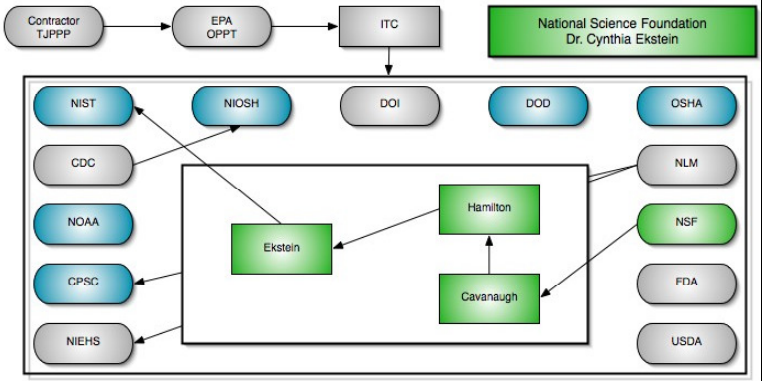

Agency Connections and Interview Reports

- Introduction
- Outline
- Policy Context
- Agency Connections and Interview Reports
- Summary
- Recommended Actions
- Questions

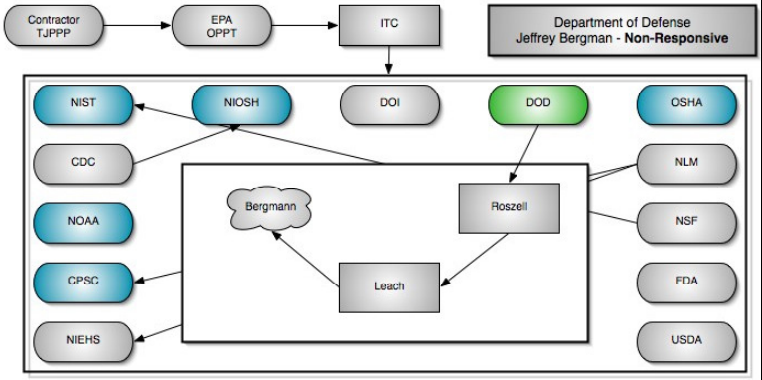

Agency Connections and Interview Reports

- Introduction
- Outline
- Policy Context
- Agency Connections and Interview Reports
- Summary
- Recommended Actions
- Questions

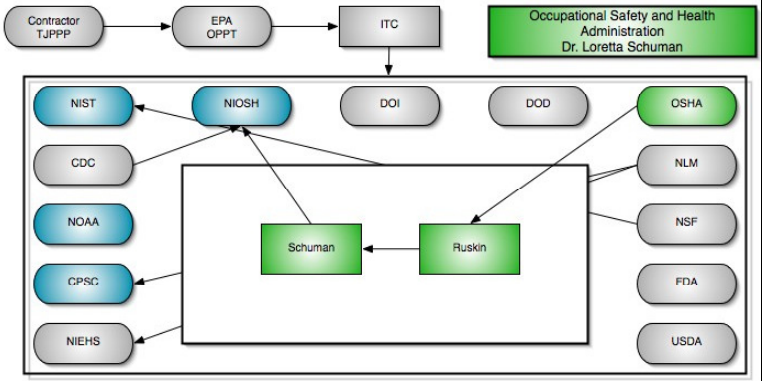

Agency Connections and Interview Reports

- Introduction
- Outline
- Policy Context
- Agency Connections and Interview Reports
- Summary
- Recommended Actions
- Questions

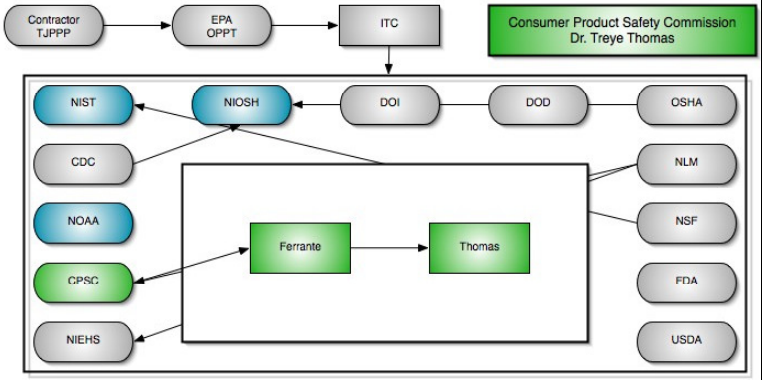

Agency Connections and Interview Reports

- Introduction
- Outline
- Policy Context
- Agency Connections and Interview Reports
- Summary
- Recommended Actions
- Questions

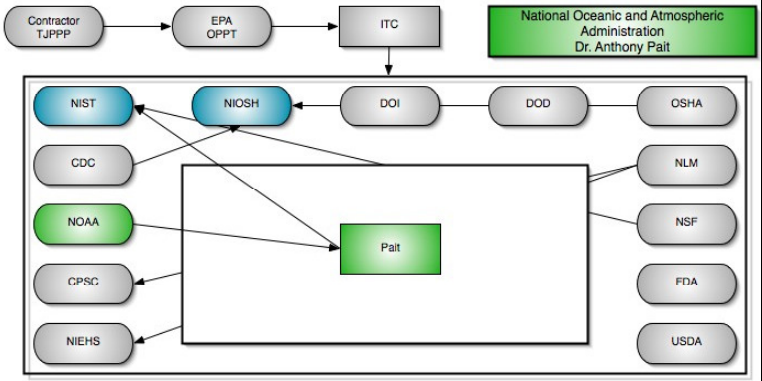

Agency Connections and Interview Reports

- Introduction
- Outline
- Policy Context
- Agency Connections and Interview Reports
- Summary
- Recommended Actions
- Questions

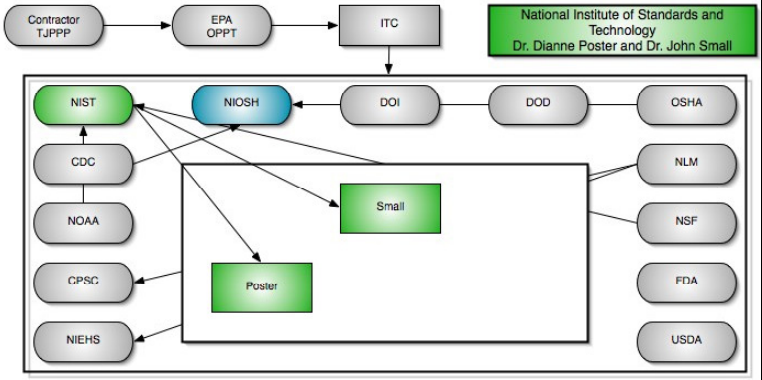

Agency Connections and Interview Reports

- Introduction
- Outline
- Policy Context
- Agency Connections and Interview Reports
- Summary
- Recommended Actions
- Questions

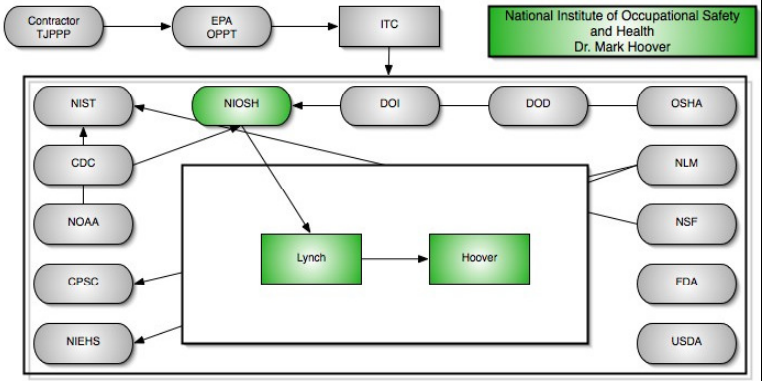

Agency Connections and Interview Reports

- Introduction
- Outline
- Policy Context
- Agency Connections and Interview Reports
- Summary
- Recommended Actions
- Questions

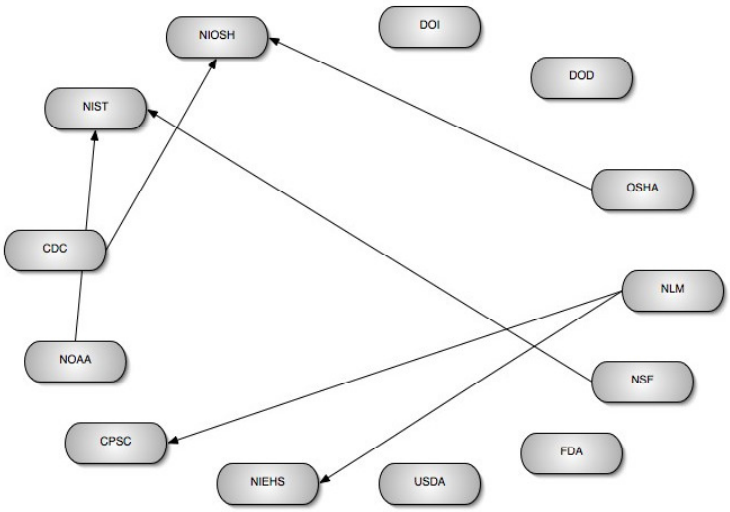

Summary

- Introduction
- Outline
- Policy Context
- Agency Connections and Interview Reports
- Summary
- Recommended Actions
- Questions

- Information is dependent on agency type
- Most agencies are researching tubules, quantum dots, or fullerenes. Some focused on either chemical structures and functions.
- Tests address pathology, exposure, physical characteristics, and others in attempt to address toxicity and hazardousness
- Most research agencies doing experimentation look at effects on several different levels

Summary

- Introduction
- Outline
- Policy Context
- Agency Connections and Interview Reports
- Summary
- Recommended Actions
- Questions

- Agencies often use protocols that already exist within their own agencies or abroad
- Mixed reviews regarding instrumentation. Some agencies have not been able to develop the proper instrumentation, and others are using current spectrophotometer and spectroscopy techniques
- Most research agencies anticipate future research

Recommendations

- Introduction
- Outline
- Policy Context
- Agency Connections and Interview Reports
- Summary
- Recommended Actions
- Questions

- A nanotechnology information clearinghouse should be established that would allow agencies and other entities to deposit and extract information
- The EPA should continue to use forums to foster agency communication
- The EPA should encourage and increase academic and private participation
- The EPA should capitalize on research in other countries

Questions

- Introduction
- Outline
- Policy Context
- Agency Connections and Interview Reports
- Summary
- Recommended Actions
- Questions

- Matt DeLesDernier
  - jmdele@wm.edu
  - (804) 475-4088
- Gwen Kennedy
  - gmkenn@wm.edu
  - (440) 645-6035
- Randy Neice
  - randy.neice@gmail.com
  - (757) 969-5373
- Joe Nash
  - Nash.Joseph@epamail.epa.gov
  - (202) 564-8886