PID Analysis for ^{3}He Polarimetry

Hannah Coombs

Advisor: Professor Todd Averett

Research Coordinator: Gina Hoatson

April 21, 2017

Contents:

Acknowledgements	3
List of Figures	4
Abstract	5
Introduction	6
Theory	9
Methods and Materials	12
Results	15
Endnotes	19

Acknowledgements

I would like to thank Professor Averett for his time, dedication, and understanding throughout the course of my project. He is a talented professor and a good mentor. Without him, this project never would have been possible.

List of Figures:

PID Schematic	7
Non – Inverting Op Amp	9
PID KiCad Schematic	10
First Circuit Board	12
Final Board	14
Amplifier Function	16
Integrating Function	16
Stable Magnetic Field	18
Resonance Shift	18

1. Abstract

The objective of this project revolves around the creation of a customized PID circuit board, for analysis of the polarization of ^{3}He gas. Helium atoms are spin polarized correctly through a combination of laser polarization and collisions with already polarized alkali metals. The circuit board is implemented within this process by locking onto the resonant frequencies of the alkali metal atoms during their atomic transitions (caused by Zeeman Splitting). This resonant frequency allows for the determination of ^{3}He polarization, through EPR: electron paramagnetic resonance.

The original circuit is a PI circuit, meaning it only contains proportional and integral components, used for amplifying and integrating an incoming signal. After conducting research on op amp circuits, it seems the most efficient way to collect this particular data is through a PID circuit, (Proportional gain, Integral gain, Derivative gain). Using KiCad, an application to design and create customized circuit boards, the precise PID components were added onto one board. This board is predicted to reduce the effect of noise on the data simply through the elimination of extra wires and hand soldering. Furthermore, the data collection should be more accurate, due to the addition of the derivative op-amp, which allows the circuit to better lock on to the alkali metal's resonant frequencies.

2. Introduction

PID circuits are often used in electronics for the purpose of efficiency and accuracy. A PID has four main components: amplifier, integrator, differentiator, and summing amplifier. Most often, PID's are used to correct error signals. This concept is modeled below.

$$\boldsymbol{E = SV - PV} \tag{2.1}$$

Where *SV* is the set value, *PV* is the process value, and *E* is defined as the error signal.

Essentially, this equation models how a PID controls a system. The set value acts as the desired value (in this case resonant frequency), while the process value represents the current value (or frequency being measured). The job of the PID discussed in this project is to "lock on" to the resonant frequencies of the alkali metal atoms as the frequency fluctuates. An example of a PID circuit can be seen below.

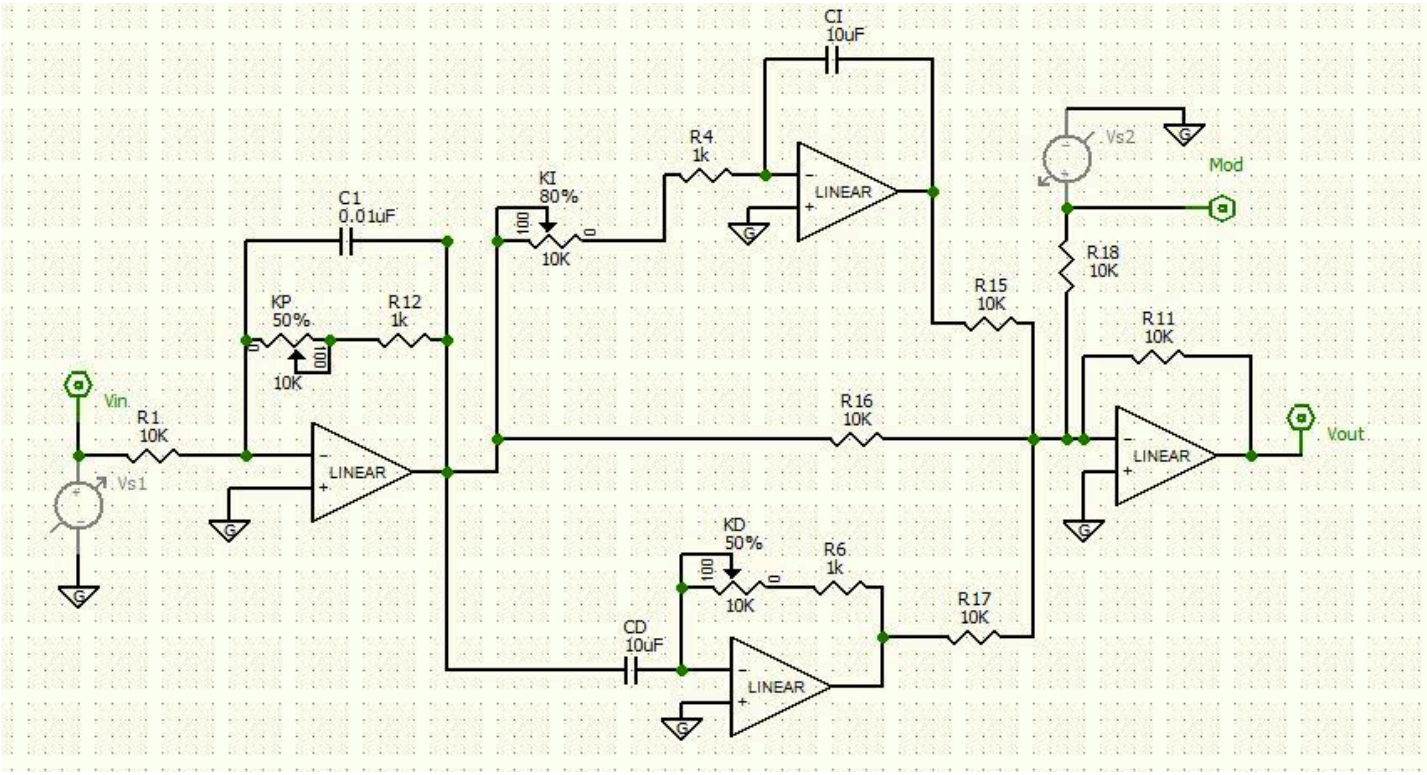

Figure 2.1 Depicts the PID circuit used in this experiment. The first op amp, on the far left of the schematic, represents the amplifier, or "P" component. The top op amp, in parallel with capacitor CI, represents the integrator or "I" component. The bottom op amp represents the differentiator or "D" component. The op amp on the far right is used only to sum the three signals together for the circuit output.

As seen in figure 2.1, each of the three major PID components can be simply constructed using general op amps[1]. The leftmost op amp represents the proportional (amplifier) component of the circuit. Were the circuit to only have the proportional part, it would be operating in p-mode[1]. While this would create an effective control loop, a circuit operating at p-mode cannot independently minimize error[1]. Essentially, the proportional component of a PID just returns an output that is proportional to the error signal, E.

The top op amp in the middle represents the integrator component. The integrator is often used to manage the error within a system by integrating the error signal and thus eliminating any effect of noise. In this way, the integral of any outside noise goes to zero.

While effective, integrators often present problems with slow-varying errors. Essentially meaning they attempt to sum previous errors even if the current error is zero[1].

The bottom op amp in figure 2.1 is the differentiator. This component is not always included in sensor circuits unless the system is rapidly changing.[1] The differentiator creates an error response to a large change in a system's data. Furthermore, the differentiator helps to eliminate the time delay that often occurs in the Integral component of the circuit.[1] The rightmost op amp is simply a summing amplifier, used to sum the output signals.

3. Theory

A PID circuit is essentially a combination of op amps functioning as amplifiers, integrators and differentiators. The equation for a no.

$$V_{out} = V_{in}(1 + R_2/R_1) \tag{3.1}$$

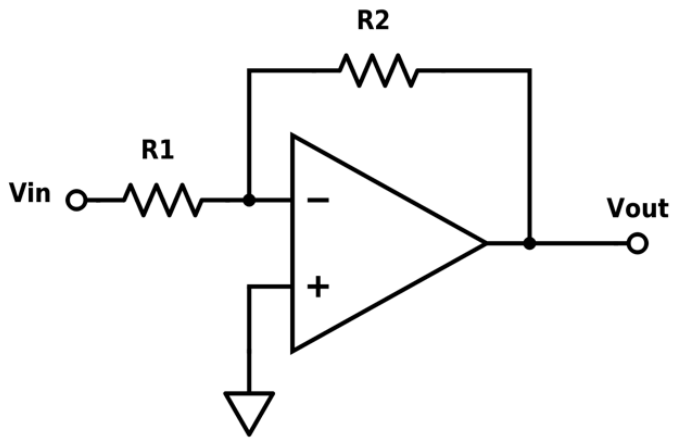

Figure 3.1 depicts a non-inverting amplifier. The output voltage, Vout, is equal to the input voltage, Vin, multiplied by the sum of the two resistors added in parallel.

This equation corresponds to the "P" part of the circuit shown in figure 2.2, that amplifies the signal coming in. The equations for the integrator and differentiator op amps are relatively similar depending on their functions. The output voltage for the entire circuit shown in figure 2.2 (a combination of all of the previously mentioned components) can be modeled by the following.

$$V_{out} = K_P\,[E(t) + K_I \int E(t)dt + K_D\, d/dt\, E(t)] \tag{3.2}$$

Where: $K_P = (1 + R_{P2}/R_{P1})$

$K_I = (1/R_2C_2)$

$K_D = (R_DC_D)$

This output equation can be used to determine the gain of the entire PID, which allows for the determination of the error signal (also mentioned above).

The *E(t)* function in this equation represents the error signal. With regard to this project, the error is the difference between the resonant frequency of the alkali metals' atomic transition (set value) and the current frequency (process value). The E function would represent the PID's effort to lock on to the signal and reduce the error as the frequency fluctuates. The integrator component accounts for the error attributed to electronic noise.

As previously stated, the objective of this project revolves around creating a customized circuit board to accurately analyze the polarization of ^{3}He. The most effective

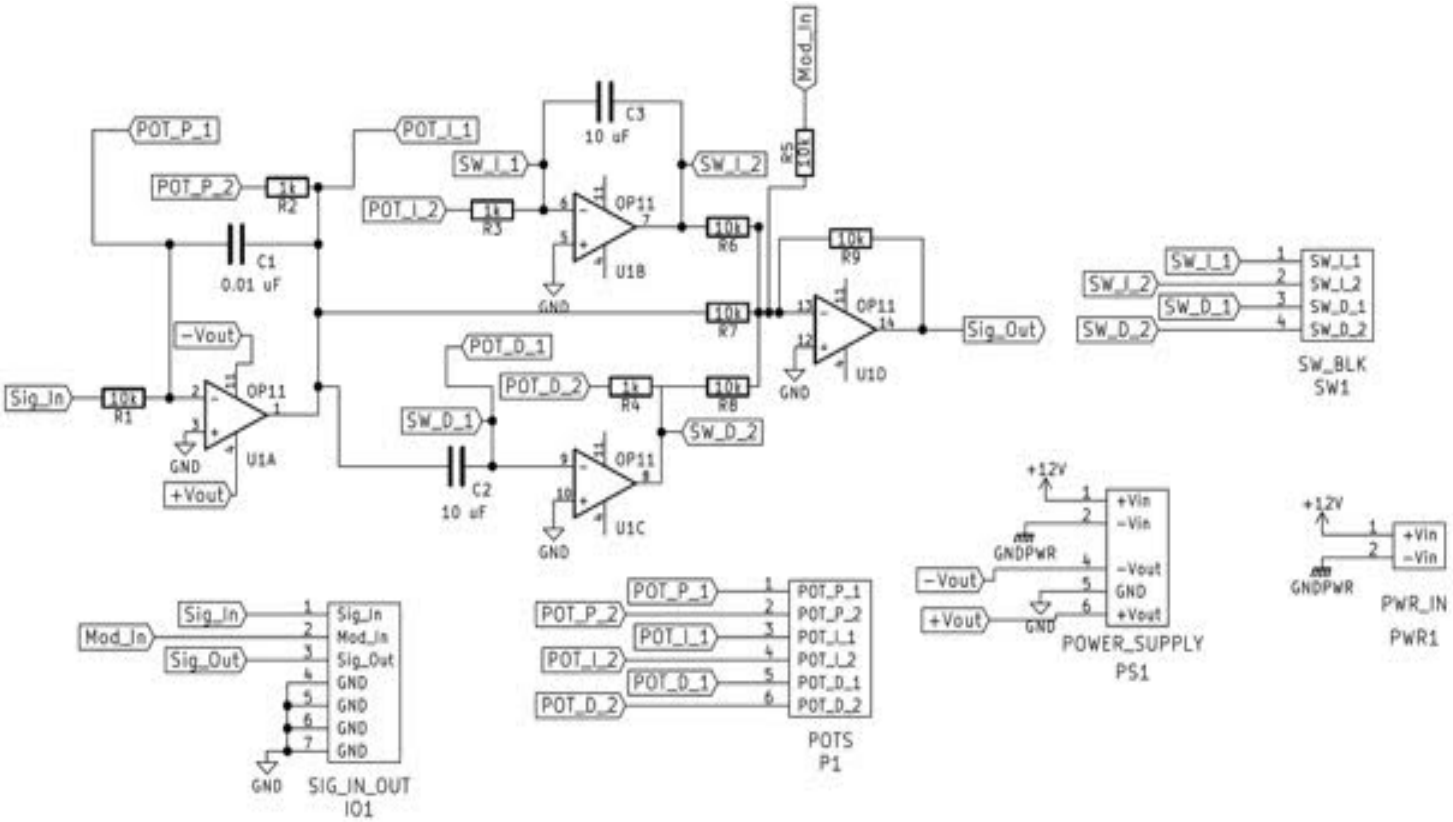

Figure 3.2 is the final schematic developed for Helium polarization analysis. Each of the four op amps can be seen within the circuit. The five smaller elements, separate from the circuit, are individual parts built specific to components we intend to use. Each of the labels attached to these parts corresponds to a matching label within the circuit, indicating where the traces will be wired.

sensor includes a PID. In this application, the differentiator is a necessary component. As the process of polarizing the ^{3}He atoms is conducted, the alkali metals in the chamber are split by the Zeeman effect. This splitting represents the hyperfine transition frequency, and is used to determine the polarization of the ^{3}He atoms through Electron Paramagnetic Resonance. After this hyperfine transition, the particles go through atomic transitions while fluorescing. The job of the PID circuit is thus to pick up and lock on to the resonant frequencies of these atoms. Since the data will be rapidly shifting, the differentiator component will be a necessity to remain locked on to the signal.

For this project, a slightly different circuit setup was implemented. The structure can be seen in figure 2.2. While the op amps are oriented in a slightly different manner, the circuit still functions as a PID. The final board, with the included differentiator, improved the ability of the PID to "lock on" to resonant frequencies by reducing the stability error of the magnetic field to .01%. Furthermore, through the use of KiCad, the internal wiring likely reduced the electronic noise, minimizing its effect on the circuit.

4. Methods and Materials

During the beginning stages of the project, the only material used was KiCad, the circuit design program. The program comes installed with basic circuit components and is relatively intuitive. However, learning the program, determining the most efficient PID setup, and designing the physical circuit board merited a semester long endeavor.

The first goal was to decide on a PID design before attempting to physically create the board. From there, while KiCad already provided most of the circuit components, certain parts still had to be created. The op amp used in the circuit is an op-11, which was designed within KiCad and added to the existing component library. The same procedure was used for the terminal strips seen on the top of the circuit in figure 4.1.

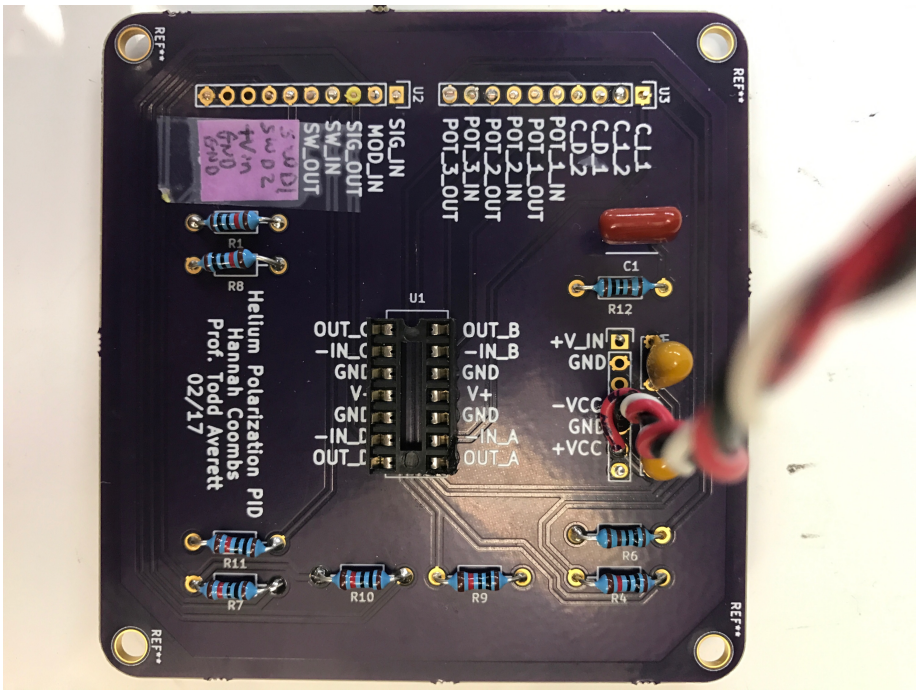

Figure 4.1 depicts the first version of the printed circuit board. The circuits, op amps, and capacitors have been hand soldered in. Due to a labeling error, the bottom portion of the second terminal strip (top left) was incorrect, thus new labels were written in over the old. Once this error was discovered, the circuit was able to complete the proportional, integral, and derivative functions of a PID. Results can be seen in figures 5.1 and 5.2.

All of the parts seen on the board layout (figure 4.1) were hand soldered in after the board arrived. This choice to hand solder the components allows for potential alterations of certain component values (specifically resistors and capacitors). While soldering does provide small amounts of electronic noise, the majority of the wiring is actually within the copper layers of the board, eliminating the majority of this "noise." Furthermore, the entire board was fitted with a ground plane; which surrounds every component and trace. This plane further helps to eliminate noise within the circuit wiring, one of the main goals of this project.

Once the board was soldered and fitted with the appropriate components, it was tested using a function generator and oscilloscope. Initially, the goal was to ensure that each of the PID components were functioning; meaning the circuit could multiply the signal as well as take the derivative and integral of the input signal. By focusing on one of these functions at a time and bypassing the other two PID components, each of these functions proved successful (see figures 5.1, 5.2).

Through a mistake in labeling a few of the original circuit components, it was originally thought that the first circuit design was incorrectly wired and therefore, irrelevant. However, after sorting out these errors, the first circuit performed all PID functions successfully. The incorrect labels were covered (see figure 4.1), and manual wiring was implemented. During this process, a new circuit was built to correct the faulty labeling and the grounding of the power supply (figure 4.2, middle right). While the correct footprint for the power supply was used, the ground ports had been incorrectly wired together. This circuit was tested using the same method used on the original circuit,

but due to a manufacturing issue, it was faulty due to an error within one of the punch-throughs (connection of a trace from one copper layer to another).

The third and final circuit (figure 4.2) altered the manufacturing issue within the punch-through. When soldered and tested, the final circuit performed all three PID functions seamlessly. From there, it was implemented within the experiment and stabilized the magnetic field to an error percentage of .01%, a huge success.

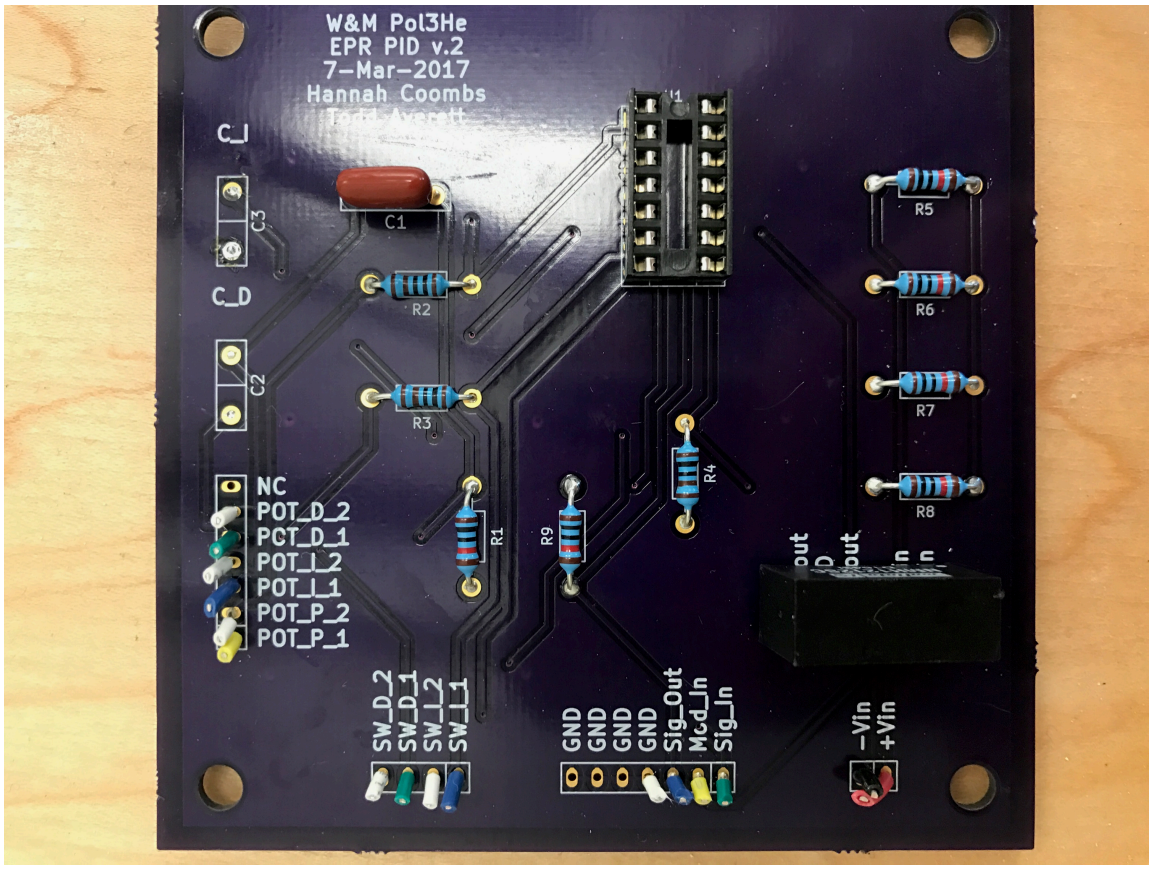

Figure 4.2 shows the final version of the printed circuit. The op amps and resistors have been hand-soldered, along with the switches and potentiometers (which will be connected to physical "switches" and adjustable knobs). As seen in the bottom right hand corner of the image, the power supply (rectangular black box) can now be implemented.

5. Results

The original purpose of this experiment was to design and build a PID circuit to analyze the polarization of Helium gas. Through trial and error, the first board (figure 4.1) was designed and manufactured using KiCad (seen above). After receiving the board, it was apparent that the silkscreen labels had not been updated as the circuit schematic had been altered; causing confusion during soldering stages. Upon reviewing the circuit design, it was discovered that the circuit components and wiring were indeed correct, despite a few ground connection issues that could be solved with external wiring. The incorrect labels were changed and a few components were manually connected, allowing the circuit to work correctly.

Once these changes had been implemented, the circuit was tested using a function generator and an oscilloscope. By bypassing certain portions of the circuit, the proportional, integral, and derivative functions could be tested individually. Each of the functions produced their desired output signal, validating that the PID controller design was correct and functional.

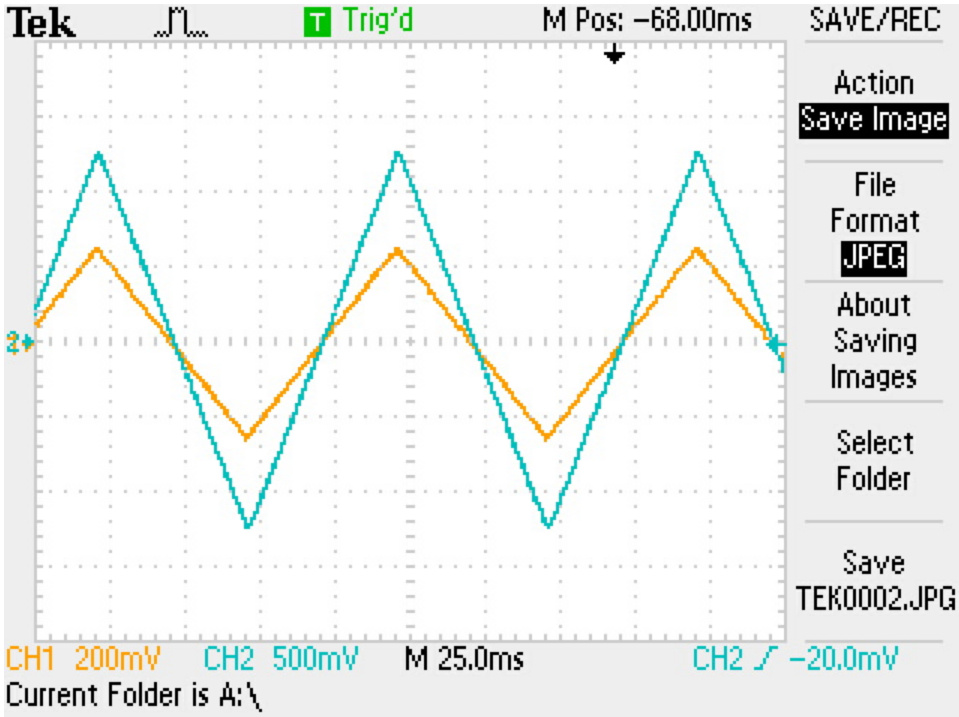

Figure 5.1 depicts the amplifier function of the circuit; the "P" function. The input signal is shown in orange, the output in teal. The teal function is clearly an amplification of the input. Both input and output align at their x-values, while the teal function exhibits larger slope values.

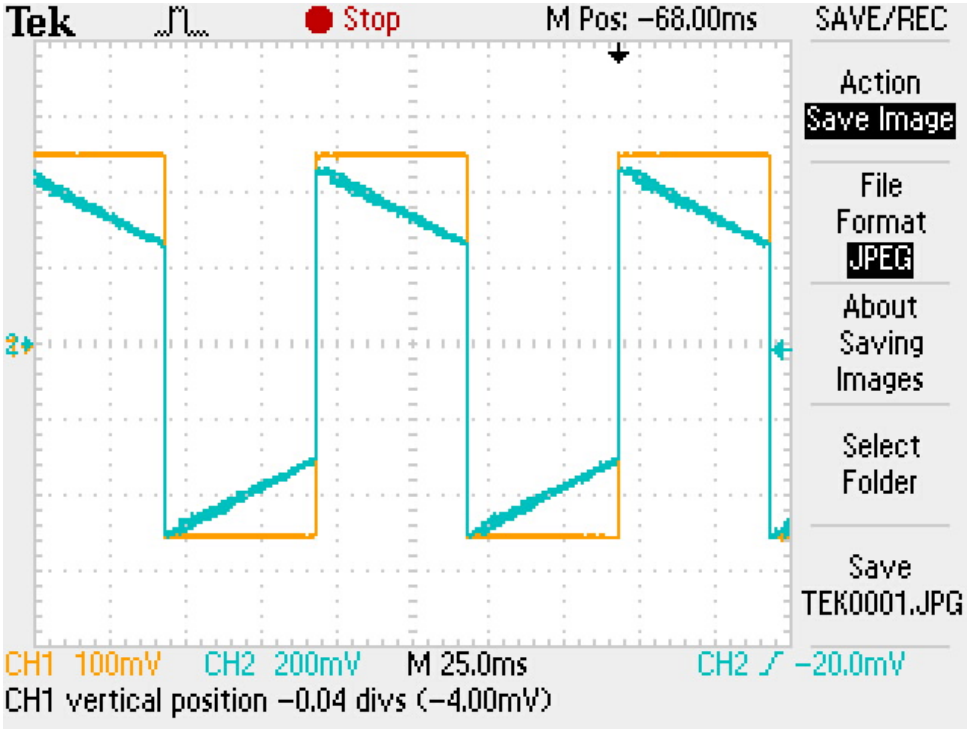

Figure 5.2 depicts the integral function of the PID circuit: the "I" function. The input signal, in orange, is integrated by the circuit, which produces the teal function as its output. Since the integration of a constant is a linear slope, it makes sense that the teal function exhibits a linear slope at each minimum and maximum of the input function.

As seen in Figures 5.1 and 5.2 above, the proportional and integral functions of the PID produced accurate outputs. In figure 5.1, the proportional graph, the orange triangle wave, represents the input function. The output function, in teal, returns the same function multiplied by some constant. The teal output is an amplification or multiplication of the original input function. Essentially, the input and output graphs should have matching x-values, while the output y-values should be much larger than those of the input. In figure 5.2, the integral graph, the input square wave is integrated to produce the teal function. Since an integrated constant produces a linear slope, the output function shows linearly sloped segments corresponding to each positive and negative constant produced by the input square wave.

The first circuit operated correctly after a few alterations were made to negate design errors. However, the schematic design did produce a PID controller. Shortly after the errors were noticed in the original design, a second circuit was ordered with the modifications implemented electronically. This circuit was tested thoroughly before a manufacturing error was recognized within one of the vias (connection of a trace between two layers of a circuit board), resulting in the production of a third board. The third and final version of the circuit arrived and was tested within the last few weeks of the semester. In addition to performing all three PID functions, the circuit functions successfully within the experiment. The board controls the magnetic field within the helium chamber by altering the current through the coils. This magnetic field stable to an error percentage of .01% (figure 5.3), completing the goal of increasing the accuracy of the PID. Furthermore, the PID successfully follows the signal as the resonance is manually adjusted (figure 5.4).

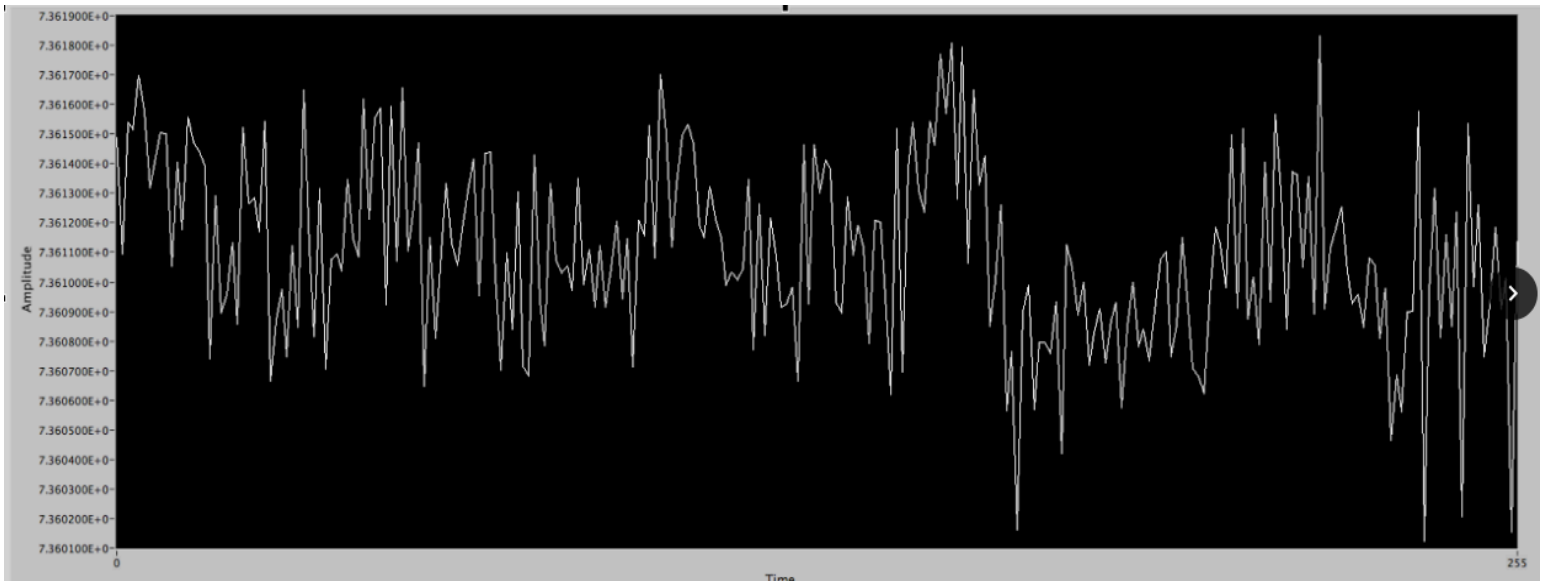

Figure 5.3 is a depiction of the magnetic field within the experiment. The y-axis depicts current and the x-axis displays time. The PID circuit controls this magnetic field through control of the current through the coils surrounding the chamber. This magnetic field is stable to an error percentage of .01%, thanks to the PID.

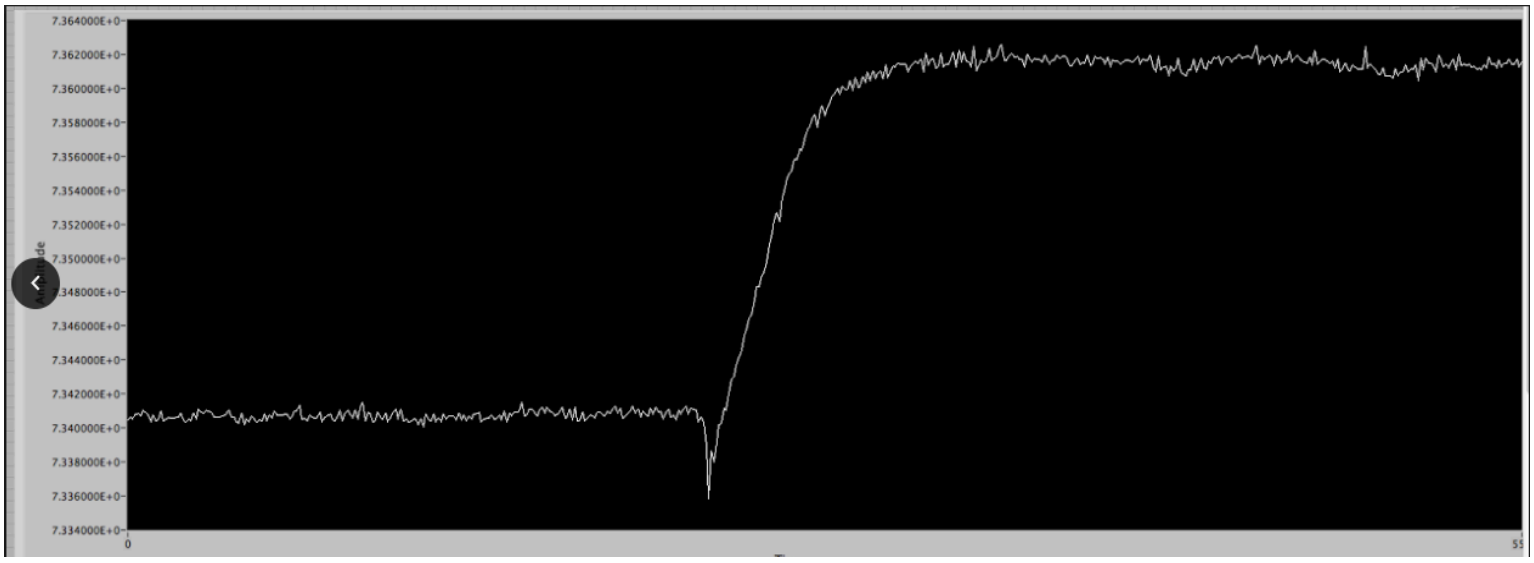

Figure 5.4 depicts the ability of the PID to follow a signal after manually shifting the resonance of the particles within the chamber. The y-axis displays current and the x-axis displays time. The PID originally follows the signal on the left side of the screen at a constant current value. At the center of the x-axis however, the resonance is shifted and the PID follows this signal through the change. This process is accurate due to the inclusion of the differentiator.

This project can be considered a success. A functioning PID schematic was designed and constructed for the purpose of Helium Polarization Analysis. After three attempts, the small errors within the circuit were removed, and the finalized board will replace the old circuit within the experiment. The new circuit completes both goals of reducing electronic noise and incorporating a derivative function to better “lock on” to incoming signals. As seen in figures 5.3 and 5.4, the circuit holds the magnetic field in the chamber stable to .01% error, a huge success for Professor Averett’s experiment. Furthermore, it accurately follows the signal in figure 5.4 as a manual resonance shift is implemented. This is likely due to the inclusion of the differentiator.

Endnotes

[1] "Sensors - May 2004 - Applying PID Control Algorithms In Sensor Circuits". *Archive.sensorsmag.com*. N. p., 2017. Web. 8 May 2017.